ALARKO

ALDENS WM/WS

65/85/105/130/150 CONDENSING BOILER

ASSEMBLY AND USER MANUAL



ENGLISH



ALDENS WM/WS – 65/85/105/130/150
Condensing Boiler Assembly and User Manual

TABLE OF CONTENTS

1. INTRODUCTION 6

1.1. General Warnings / Warranty Period and Conditions of the Appliance 6

1.2. Consumer's Rights of Choice 9

1.3. Product Declaration of Conformity 10

2. IDENTIFICATION/DESCRIPTION OF THE PRODUCT 11

2.1. Control Panel and Indicators (Leading Boiler) 11

2.2. Technical Specifications 12

2.3. Product Declarations According to the Ecodesign (ErP) Regulation 13

2.4. Overview and Sub-Components 16

2.4.1 ALDENS WM/WS – 85/105/30/150 16

2.5. What You Need to Know Before Assembly 18

2.5.1. Shipment List 18

2.5.2. External Accessories 19

2.5.3. Appliance and Installation Connection Dimensions (Same for Leading and Follower Boilers) 23

2.5.4. Assembled Dimensions in the Cascade System 24

2.5.5. What is Required in the Primary Circuit of the Installation for the Long Life and Correct Operation of Your Appliance 24

2.5.6. Minimum Distances to be Left Between the Wall and the Boiler 25

2.5.7. Mechanical Circuit Diagrams (Hydraulic, Gas, Waste Gas) 27

2.6. Water Management 28

2.6.1. Circulation Pump Specifications and Characteristic Curves 28

2.6.2. Water Pressure Monitoring and Control System 31

2.6.3. Filling/Draining of Water in the Installation 33

2.6.4. Notes on Hardness, Conductivity, and Calcification of Water 33

2.7. Over Delta T (ΔT) Prevention System 34

3. UNPACKING AND ASSEMBLY 35

3.1. General and Safety Warnings 35

3.1.1 Installation Safety Warnings and Information 35

3.1.2 Safety Warnings and Useful Information About the Exchanger, Fan, and Venturi Group 38

3.1.2.1. ALDENS Burner and Condensation Technology 38

3.1.2.2. Exchanger Carrying Assembly (Patent-PT2014/15542) 40

3.1.2.3. Limit Thermostat 41

3.1.2.4. Thermal Fuse 42

3.2. Unpacking the Device 43

3.3. Issues to Take into Account for the Wall Mounting of the Boiler and the Carrier System 44

3.4. Basic Electrical Diagram and External Connections 44

3.5. Flue Types and Elements 50

3.5.1. Standard Flue Illustrations 51

3.5.2. About Flue Installation Design 54

3.6. Boiler, Solar Collector, Direct and Blend Circuits, and Installation System Examples 56

3.7. Number of Boilers, Expansion Module, and Sensor Usage Numbers 59

4. SETTINGS AND MAINTENANCE 60

4.1. Temperature Settings and Operation Mode Selection from the Control Panel 60

4.1.1. Setting Comfort Temperature 60

4.1.2. Selection of Boiler Operation Mode 61

4.2. Access to Menus and Parameters 63

4.3. Running Time Scheduling 64

4.4. Frost Prevention Settings 67

4.5. Heating Curve 68

4.6. Main and Important Practical Parameters 69

4.7. Boiler Maintenance Content 70

4.8. System Monitoring and Control via Web Server and Local Network/Internet 71

5. ERROR CODES 72

6. ENERGY-SAVING RECOMMENDATIONS 76

1. INTRODUCTION

Thank you for choosing ALARKO.

- This manual is for ALARKO's ALDENS WM/WS condensing boiler appliances. The assembly and operating manual are an integral part of the appliance. It should always be kept close to the appliance, in a safe place, for reference when necessary. If the appliance is sold or transferred to someone else, this manual should also be provided with the appliance to be read by the new user and/or installer.

1.1. General Warnings/Warranty Period and Conditions of the Appliance

Use the information described in this assembly manual and strictly follow the instructions. These instructions, warnings, and information are primarily related to your safety and then to the safety of your product. The order of the items in the manual has been prepared by considering the order of the unpacking, which is the beginning of the first installation, then assembly, commissioning and operation, maintenance, and finally deactivation and dismantling when necessary.

If your appliance is not connected to the wall or hanger system, its natural position for maintenance, inspection, or part replacement is the flat and horizontal position described in the following sections of this manual when the appliance is first unpacked. This should be strictly observed, especially in cases where heat exchanger assembly or disassembly is required.

ALDENS boilers are set to operate with natural gas by default. If LPG is to be used as fuel, all boilers that are installed or to be installed in your system must be converted to operating condition with LPG.

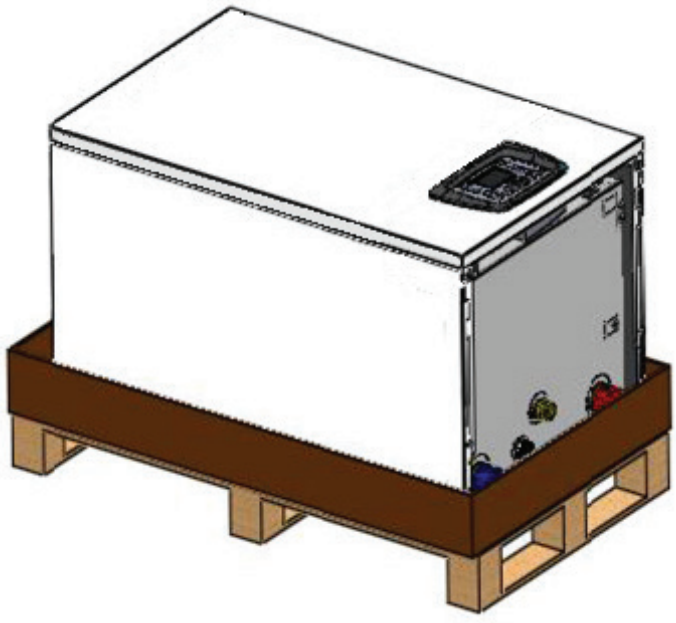

- The manufacturer assumes no responsibility for any damage, loss, or injury to persons, animals, or property caused by errors in the installation and/or use of the appliance or failure to comply with existing local and national standards and/or manufacturer's instructions.
- After unpacking, the appliance must be checked for damage. In case of any doubt, the product should not be used and the dealer should be consulted. Packaging materials (cardboard box, nylon bag, etc.) should be kept away from children. Since these materials pose a potential hazard, they must be disposed of reliably.
- Spray, solvent, chlorinated cleaning agent, paint, and adhesives should not be used and explosive or flammable liquids/solids should not be kept near the appliance.
- No furnace should be placed near the appliance and it should be protected from direct water vapor.
- Before any cleaning or maintenance, the appliance must be disconnected from the mains voltage by switching off the mains switch and/or other disconnecting switches.
- Air inlet or flue gas outlet grilles should not be blocked or closed in any way. In the event of a fault and/or malfunction exist in the appliance, the system must be switched off. You should call the authorized service before any intervention or repair.
- All warranty repairs of the appliance must only be carried out by services authorized by the manufacturer, using original spare parts.
- In order to guarantee efficiency and correct operation, the appliance must be maintained annually (at least once a year) by the authorized service.
- When the use of the appliance is no longer needed, parts that may constitute a potential source of danger should be rendered harmless.
- Only original accessories or optional parts (including electrical parts) should be used with the appliance.
- The place where the appliance is operated must be ventilated by means of an air inlet protected by a grille.
- Children should not play with the device. Cleaning and user maintenance should not be made by children without supervision.
- This appliance can be used by children aged 8 years and above and persons with reduced physical, sensory or mental capabilities or lack of experience and knowledge if they have been given supervision or instruction concerning use of the appliance in a safe way and understand the hazards involved.
- It should be explained that all poles of the device's connection to the fixed installation must be made with a suitable disconnector circuit breaker component.

What to Do in Case of Gas Leakage

- Calm down.
- If there is a burning furnace around, turn it off.
- Open all windows and doors.
- Close the gas inlet valve and the valves of other gas appliances, if any.
- Do not light matches, lighters, etc. and do not smoke.
- Do not play with the light switches, do not turn them off if they are on, do not turn them on if they are off.
- Do not operate electrical appliances.
- Do not pull/insert plugs.
- Do not use doors or warning bells.

- Do not use phones.
- Exit the gaseous environment and inform the manager, the gas company, and the fire brigade.

Electricity Usage Rules and Warnings

- The appliance is considered electrically safe as long as it is connected to an effective earthing system installed in accordance with current safety standards. This basic safety measure must be checked and verified. The manufacturer shall not be held responsible for any damage or loss of property or life caused by an ineffective grounding system or the absence of a grounding system.
- Ensure that the electrical supply at the location where the appliance will be assembled is controlled by a qualified electrician to ensure that the appliance will support the maximum power absorption shown in the assembly and operating manual. In particular, make sure that the cable dimensions are suitable for the power drawn by the appliance.
- Do not use adapters, multiple plugs, or extension cables to connect the appliance to mains power.

  The connection must be made through a suitable electrical fuse according to the current electrical regulations.
- If the appliance is assembled in a place where there is a risk of freezing, the frost protection can only be activated when the appliance is supplied with power and the gas valve is open. The manufacturer cannot be held responsible for any damages that may occur to the appliance if this instruction is not followed.
- Do not touch the appliance with wet or damp parts of your body or barefoot.
- Do not pull the electrical cables.
- Do not expose the appliance to rain, snow, hail, and sun.
- The power cord must not be replaced by the user. If the cable is damaged in any way, turn off the appliance and have the cable replaced by an authorized service.

Warranty and Service Conditions, Lifetime of the Appliance

- Provided that the principles, warnings, and standards specified in the user manual are complied with, your appliance is under 2 (two) years Alarko Carrier warranty against material and manufacturing faults.
- The warranty certificate must be filled and approved by the dealer from whom you purchased your appliance and delivered to you. Be sure to ask for it.
- Alarko Carrier authorized services are at your service even in the slightest problem. You can find Alarko Carrier authorized services at “www.alarko-carrier.com.tr” web address.
- If you encounter any problems, you can call our Customer Service Line at 444 0 128 from all over Turkey, and you can reach Alarko Carrier Customer Service Department via the internet or e-mail at info@alarko-carrier.com.tr.
- According to the relevant communiqués of the Ministry of Industry and Trade, the economic life of the appliance is 10 (ten) years if used in accordance with the instructions for use.
- Our company is obliged to keep all kinds of spare parts related to your appliance during this period.

Cases Where the Warranty is Invalid

- Performing the first commissioning process by unauthorized companies and persons.
- Damages caused by interventions made by unauthorized companies and persons.
- Assembly, use, and maintenance works that do not comply with the regulations and assembly instructions.
- Failures or damages that may occur due to reasons such as freezing, overheating, flooding, fire, theft, lightning, earthquake, war, riot, terrorist acts.

- Changing or destroying the serial number of the appliance.
- Use of the appliance for show, fair, and exhibition purposes.
- Failure of the customer to submit the approved warranty certificate or invoice.
- Damage caused during the transportation of the appliance is under the responsibility of the customer.

General Information

Natural gas is an environment-friendly fuel. Therefore, your natural gas condensing appliances are a high-value product and are equipped with the most recent safety measures.

The maintenance period of your appliance is 1 year. Have your boiler serviced by your Alarko Carrier authorized services on a regular basis every year.

1.2. Consumer's Rights of Choice

1. When it is understood that the goods are defective the consumer may use one of the following options:

   a) To withdrawal from the contract by declaring that it is ready to return the sold item,

   b) To withhold the sold item and request a discount from the sales price at the defect rate,

   c) To request free repair of the sold item at the seller's expense if it does not require an excessive cost,

   ç) To request that the sold product be replaced with a non-defective one, if possible. The seller is obliged to fulfill the consumer's preferred request.

2. The right of free repair or replacement of the product with a non-defective one can also be used against the manufacturer or the importer. Seller, manufacturer, and the importer are conjointly responsible for the fulfillment of these rights. The manufacturer or the importer cannot be held responsible if they prove that the defect has arisen after the product has been put on the market by them.
3. In the event that free repair or replacement of the product with a non-defective one will bring disproportionate difficulties for the seller, the consumer may use one of their rights to renege on the contract or to reduce the price at the rate of the defect. While determining the disproportion, issues like the non-defective value of the good, the importance of the fault, and whether applying for the other rights of choice would cause any problems for the consumer will be taken into account.
4. In case of choosing one of the rights of free repair or replacement of the goods with a non-defective one, it is obligatory to fulfill this request within a maximum of thirty working days, and within sixty working days for residential and holiday immovables, from the date of the request to the seller, manufacturer, or importer. However, the consumer's request for free repair regarding the goods included in the list annexed to the regulation issued pursuant to Article 58 of this Law is fulfilled within the maximum repair period determined in the regulation. Otherwise, the consumer is free to use other rights of choice.
5. In cases where the consumer chooses the right to renege on the contract or discount at the rate of defect, the entire price paid or the amount of the discount made from the price is immediately returned to the consumer.
6. All costs incurred due to the exercise of rights of choice are borne by the party that fulfills the right chosen by the consumer. Along with one of these rights of choice, the consumer may also claim compensation in accordance with the provisions of the Turkish Code of Obligations dated 1/11/2011 and numbered 6098.

If your dispute regarding the goods/services you have purchased is related to:

- The defect in goods/services,
- The unfair terms contained in the contract you have signed with the seller/provider,

- The early payment discount to be made is wrong or not made at all in case you make an early payment for the goods/services you purchased in installments,
- The failure to deliver the goods/services you purchased with a campaign (prepaid) on time and properly,
- The failure to deliver the goods/services you have received through the distance contract (internet, TV, etc.) on time and the failure to return the price despite you exercising your right of reneging,

you will need to apply to the Consumer Arbitration Committee or the Consumer Court located within the Provincial Directorate of Commerce and District Governorship where you reside or where you purchase the goods/services, taking into account the disputed amount, in order to resolve your dispute. If there is no Consumer Court in your location, you can apply to the Civil Courts of First Instance in the capacity of Consumer Court.

If your dispute is related to:

- The failure to deliver a warranty certificate, Turkish introduction and user manual with the goods you have purchased,
- The failure to give you the contract, which is required in the Law to be arranged in writing and a copy to be given to you,

you can apply to the Provincial Directorate of Commerce located in the Governorship of the province you reside in order to carry out the necessary administrative procedures.

1.3. PRODUCT DECLARATION OF CONFORMITY

Alarko Carrier declares that all its products are produced of high quality and comply with the relevant standards.

Alarko condensing boilers comply with the following regulations and relevant standards:

2016/426/EU - REGULATION ON GAS BURNING APPLIANCES

2014/30/EU - ELECTROMAGNETIC COMPATIBILITY DIRECTIVE

2014/35/EC - LOW VOLTAGE DIRECTIVE

2006/42/EC - MACHINERY SAFETY DIRECTIVE

2010/30/EU - ENERGY LABELING REGULATION COVERING BOILERS AND COMBI BOILERS

2009/125/EC - ECODESIGN REGULATION FOR BOILERS AND COMBI BOILERS

Standards:

EN 15502-1:2012+A1:2015 – Gas burning central heating boilers – Part 1 EN

15502-2-1:2013 – Gas burning central heating boilers – Part 2

If the appliance is used in accordance with the instructions for use, its economic life is 10 years.

2. IDENTIFICATION/DESCRIPTION OF THE PRODUCT

2.1. Control Panel and Indicators (Leading Boiler)

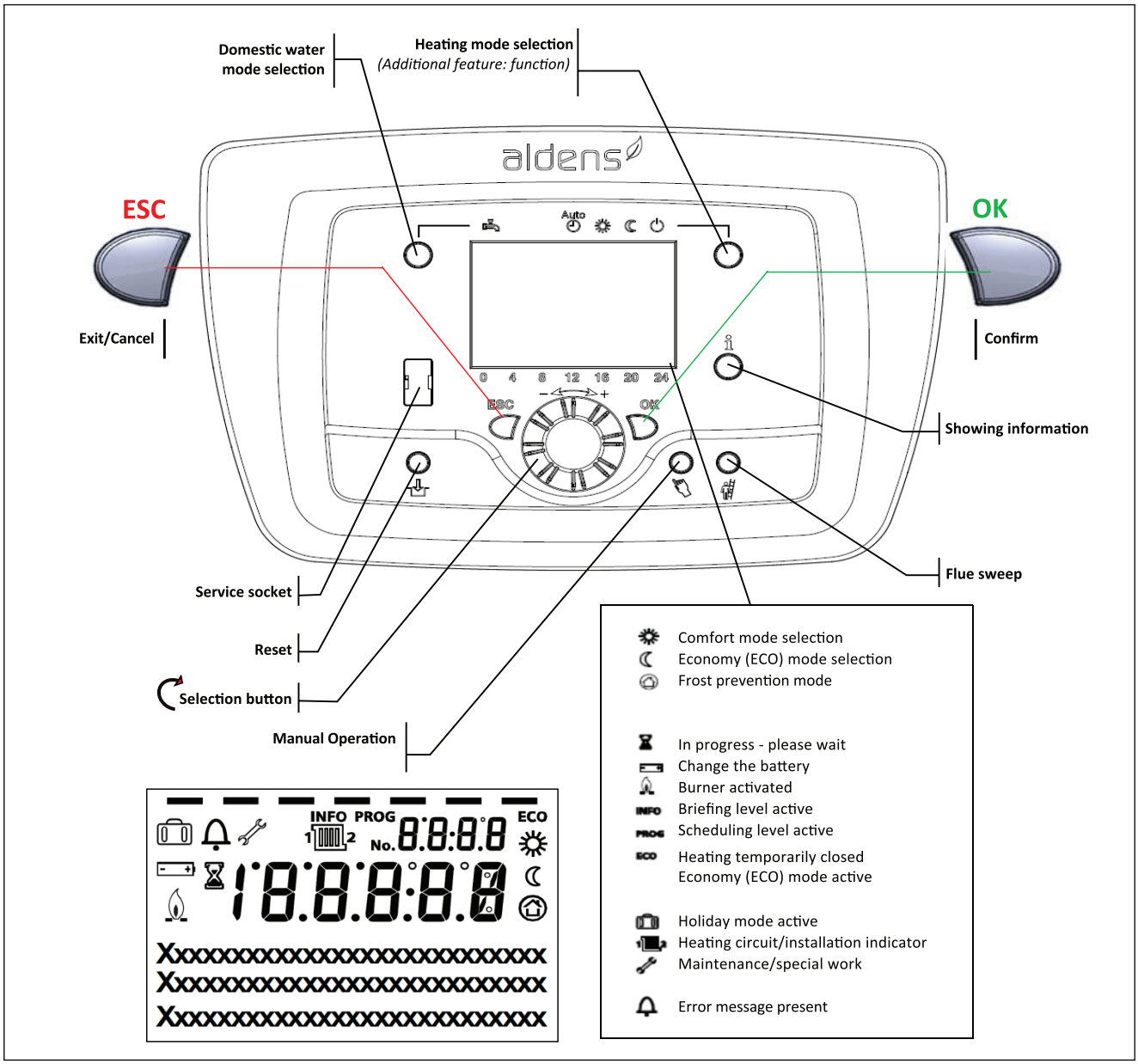

Dashboard (Follower Boiler)



Panel light		View	Description
Off		-	Boiler pending
Blue		Continuous	Burner activated
Red		Flashing	Boiler failure
Purple		Temporary and continuous	This is seen when the boiler is first powered for a short time and during the loading of the parameters.

2.2. Technical Specifications

FEATURE	UNIT	ALDENS WM/WS 65 (*)	ALDENS WM/WS 85	ALDENS WM/WS 105	ALDENS WM/WS 130	ALDENS WM/WS 150
Available Types for Cascade Operation		Master (WM) Slave (WS)	Master (WM) Slave (WS)	Master (WM) Slave (WS)	Master (WM) Slave (WS)	Master (WM) Slave (WS)
Fuel		Natural Gas (G20) + LPG (G31)	Natural Gas (G20) + LPG (G31)	Natural Gas (G20) + LPG (G31)	Natural Gas (G20) + LPG (G31)	Natural Gas (G20) + LPG (G31)
Inlet Pressure	mbar	21	21	21	21	21
Fuel Consumption at Maximum Load at Condensation (50/30 °C)	m^3/h	6,87	8,81	11,14	12,96	14,78
Minimum Load Fuel Consumption at Condensation (50/30 °C)	m^3/h	1,35	1,83	2,31	2,77	3,12
Boiler Rated Power / Efficiency						
Rated Heat Load (Maximum / Minimum)	kW	63,5 / 12,5	85,0 / 17,0	105,0 / 21,0	125,0 / 26,0	145,0 / 29,0
Maximum / Minimum Power - (50/30 °C)	kW	67,2 / 13,4	89,8 / 18,3	109,7 / 22,9	130,8 / 27,9	153,9 / 30,7
Maximum / Minimum Power - (80/60 °C)	kW	61,6 / 12,0	81,9 / 16,6	101,0 / 20,3	121,6 / 25,5	143,7 / 28,2
Efficiency (50/30 °C – Maximum / Minimum Load)	%	105,8 / 107,3	105,6 / 107,9	104,5 / 109,0	104,6 / 107,3	106,2 / 105,8
Efficiency (80/60 °C – Maximum / Minimum Load)	%	97,0 / 95,8	96,4 / 97,7	96,2 / 96,8	97,3 / 98,0	99,1 / 97,2
Information Required for Flue Installation						
Flue Pressure (Maximum / Minimum Load)	Pa	137 / 79	205 / 140	218 / 114	285 / 140	323 / 168
Flue Pressure (Ignition)	Pa	106	200	178	196	245
Maximum Waste Gas Flow Rate - (80/60 °C)	g/s	30,0	38,2	48,4	57,0	64,2
CO_2 Concentration at Maximum Load - (80/60 °C)	%	9,2	9,1	9,3	9,3	9,5
Maximum Waste Gas Temperature - (80/60 °C)	°C	82,7	72,6	80,3	79,7	75,6
Flue Diameter (waste gas/fresh air)	mm	100 / 150	100 / 150	100 / 150	100 / 150	100 / 150
Appliance NOx Class	-	6	6	6	6	6
Internal Waste Gas Flap	-	NONE / Requires External Use	YES	YES	YES	YES
Electrical Features						
Electrical Supply (Voltage/Frequency)	VAC/Hz	230 / 50	230 / 50	230 / 50	230 / 50	230 / 50
Fuse to be Used	A	6,3	6,3	6,3	6,3	6,3
Electricity Consumption in Standby (Off) State	W	2,7	2,7	2,7	2,7	2,7
Maximum Electricity Consumption	W	92	107	132	206	287
Installation						
Gas Connection	inch	¾"	¾"	¾"	¾"	¾"
Boiler Water Outlet/Return Connections	inch	1"	1 ¼"	1 ¼"	1 ¼"	1 ¼"
Maximum Operating Pressure	bar	4,5	6	6	6	6
Minimum Operating Pressure	bar	1	1	1	1	1
Maximum Load 50/30 °C – Boiler Resistance	mSS	5,1	3,9	5,9	6,0	7,0
Maximum Load 80/60 °C – Boiler Resistance	mSS	4,3	3,0	4,7	4,9	4,3
Maximum Load 50/30 °C – Water flow rate	m^3/h	2,8	3,7	4,6	5,3	6,2
Boiler Filling (Exchanger) Water Capacity	lt	3,4	6,6	6,6	8,2	10,1
General Specifications						
Net Appliance Dimensions (Width x Depth x Height)	mm	493 x 540 x 627	493 x 540 x 797	493 x 540 x 797	493 x 540 x 797	493 x 635 x 797
Packaging Dimensions (Width x Depth x Height)	mm	565 x 740 x 760	565 x 910 x 760	565 x 910 x 760	565 x 910 x 760	565 x 910 x 850
Appliance Weight (Empty/Full)	kg	54,6 / 58	68,7 / 75,3	68,7 / 75,3	75,2 / 83,4	88,6 / 98,7
Weight with Package	kg	58,6	72,7	72,7	79,2	92,6
Type	-	Hermetic/full condensing				
Control Panel	-	Electronic and push button				
Ignition and Flame Ionization Control	-	Electronic				
Troubleshooting and Warning System	-	YES (error code on screen)				
Compliance with Underfloor Heating System	-	YES				
Cascade Operation	-	Maximum 16				
Frost Safety	-	YES				
Time Scheduling / Holiday Mode	-	YES				
Parametric Setting Terminal	-	User screen / PC				

(*) The values given in ALDENS WM and WS 65 columns are the results except for the waste gas back flow inhibitor flap proposed by Alarko Carrier.

2.3. Product Declarations According to the Ecodesign (ErP) Regulation

Model(s):			ALDENS WM-65, ALDENS WS-65				
Condensing Boiler:			YES				
Low Temperature Boiler:			NO				
B11 Boiler:			NO				
Cogeneration Room Heater:			NO	**Additional heater**			NO
Combined Heater:			NO				
Item	**Symbol**	**Value**	**Unit**	**Item**	**Symbol**	**Value**	**Unit**
Nominal heat power	P_n	65	kW	Seasonal room heating energy efficiency	η_s	91	%
For room heater boilers and combined heater boilers: Useful heat capacity				*For room heater boilers and combined heater boilers: Useful efficiency*			
At maximum capacity and high temperature operation (*)	P_4	61,6	kW	At maximum capacity and high temperature operation (*)	η_4	87,3	%
At 30% of maximum capacity and low temperature operation (**)	P_1	20,7	kW	At 30% of maximum capacity and low temperature operation (**)	η_1	97,7	%
Auxiliary electricity use				*Other items*			
At full load	el_{max}	92	W	Heat loss during standby	P_{stby}	0,068	kW
At partial load	el_{min}	17	W	Ignition burner power consumption	P_{ign}	1,75	kW
In standby state	P_{SB}	3	W	Sound intensity level, indoor	L_{WA}	58,8	dB
				Release of nitrogen oxides	NOx	44,2	mg/kWh
Contact info	ALARKO CARRIER SAN. TİC. A.Ş., GOSB - Gebze O.S.B., Şahabettin Bilgisu Cad., 41400, Gebze/Kocaeli/Türkiye						
(*) High temperature operation means water temperature of 60°C on return to the boiler and 80°C on outlet from the boiler.							
(**) Low temperature means 30°C for condensing boilers, 37°C for low temperature boilers, and 50°C for other types of appliances.							

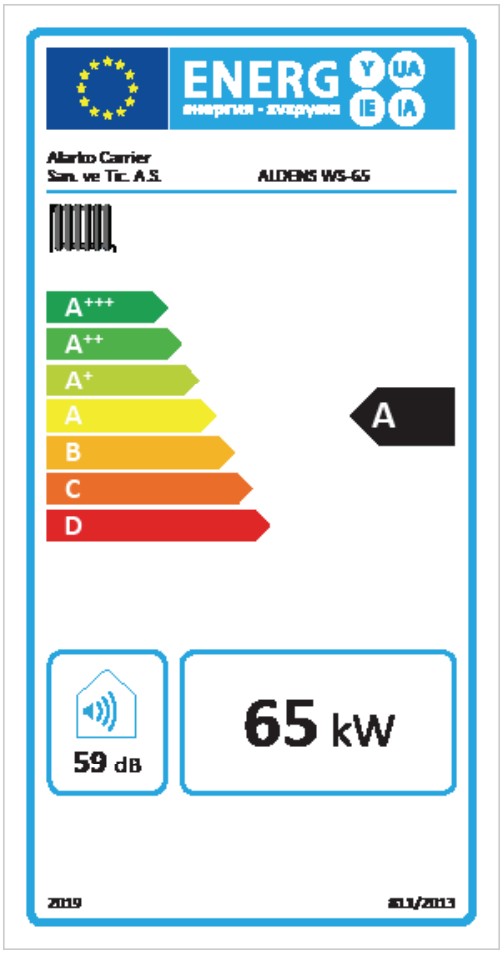

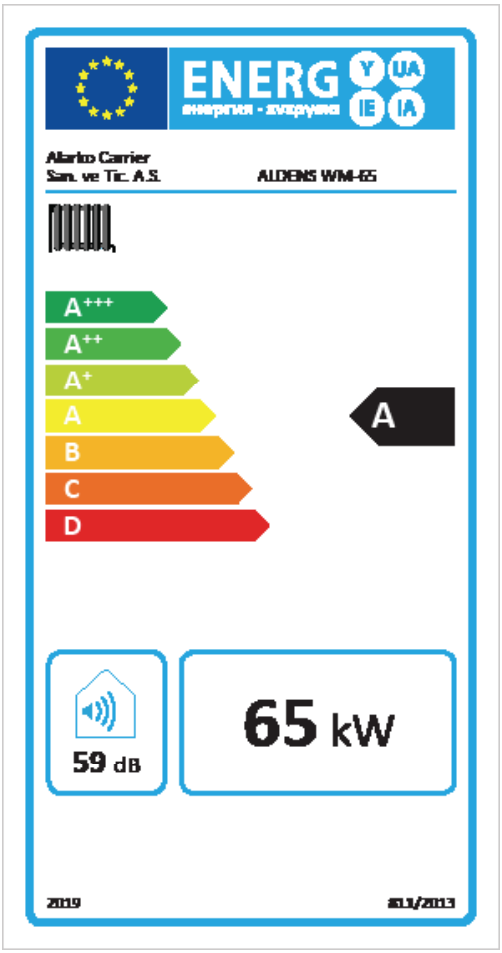

Product Slip for ALDENS WM-65 and ALDENS WS-65

Seasonal room heating energy efficiency class		A
Nominal heat power	kW	65
Seasonal room heating energy efficiency	%	91
Sound intensity level, indoor, LWA	dB	58,8

Model(s):			ALDENS WM-85, ALDENS WS-85				
Condensing Boiler:			YES				
Low Temperature Boiler:			NO				
B11 Boiler:			NO				
Cogeneration Room Heater:			NO	**Additional heater**			NO
Combined Heater:			NO				
Item	**Symbol**	**Value**	**Unit**	**Item**	**Symbol**	**Value**	**Unit**
Nominal heat power	P_n	86	kW	Seasonal room heating energy efficiency	η_s	93	%
For room heater boilers and combined heater boilers: Useful heat capacity				*For room heater boilers and combined heater boilers: Useful efficiency*			
At maximum capacity and high temperature operation (*)	P_4	81,9	kW	At maximum capacity and high temperature operation (*)	η_4	86,8	%
At 30% of maximum capacity and low temperature operation (**)	P_1	27,8	kW	At 30% of maximum capacity and low temperature operation (**)	η_1	98,1	%
Auxiliary electricity use				*Other items*			
At full load	el_{max}	105	W	Heat loss during standby	P_{stby}	0,08	kW
At partial load	el_{min}	20	W	Ignition burner power consumption	P_{ign}	2,92	kW
In standby state	P_{SB}	3	W	Sound intensity level, indoor	L_{WA}	61,9	dB
				Release of nitrogen oxides	NOx	46,2	mg/kWh
Contact info	ALARKO CARRIER SAN. TİC. A.Ş., GOSB - Gebze O.S.B., Şahabettin Bilgisu Cad., 41400, Gebze/Kocaeli/Türkiye						
(*) High temperature operation means 60°C water temperature on return to the boiler and 80°C water temperature on outlet from the boiler. (* *) Low temperature means 30°C for condensing boilers, 37°C for low temperature boilers, and 50°C for other types of appliances in operation boiler return.							

Model(s):			ALDENS WM-105, ALDENS WS-105				
Condensing Boiler:			YES				
Low Temperature Boiler:			NO				
B11 Boiler:			NO				
Cogeneration Room Heater:			NO	**Additional heater** |NO			
Combined Heater:			NO				
Item	**Symbol**	**Value**	**Unit**	**Item**	**Symbol**	**Value**	**Unit**
Nominal heat power	PN	106	kW	Seasonal room heating energy efficiency	ns	93	%
For room heater boilers and combined heater boilers: Useful heat capacity				*For room heater boilers and combined heater boilers: Useful efficiency*			
At maximum capacity and high temperature operation (*)	P_4	101.0	kW	At maximum capacity and high temperature operation (*)	η4	86.6	%
At 30% of maximum capacity and low temperature operation (**)	P_1	34.4	kW	At 30% of maximum capacity and low temperature operation (**)	n1	98.3	%
Auxiliary electricity use				*Other items*			
At full load	elmax	129	W	Heat loss during standby	P^{stby}	0.08	kW
At partial load	el_{min}	23	W	Ignition burner power consumption	P_{ign}	1.966	kW
In standby state	P_{SB}	3	W	Sound intensity level, indoor	L^{WA}	63.8	dB
				Release of nitrogen oxides	NOx	41.3	mg/kWh
Contact info	ALARKO CARRIER SAN. TİC. A.Ş., GOSB - Gebze O.S.B., Şahabettin Bilgisu Cad., 41400, Gebze/Kocaeli/Turkey						
(*) High temperature operation means 60°C water temperature on return to the boiler and 80°C water temperature on outlet from the boiler. (* *) Low temperature means 30°C for condensing boilers, 37°C for low temperature boilers, and 50°C for other types of appliances in operation boiler return.							

Model(s):			ALDENS WM-130, ALDENS WS-130				
Condensing Boiler:			YES				
Low Temperature Boiler:			NO				
B11 Boiler:			NO				
Cogeneration Room Heater:			NO	**Additional heater** NO			
Combined Heater:			NO				
Item	**Symbol**	**Value**	**Unit**	**Item**	**Symbol**	**Value**	**Unit**
Nominal heat power	PN	128	kW	Seasonal room heating energy efficiency	ns	93	%
For room heater boilers and combined heater boilers: Useful heat capacity				*For room heater boilers and combined heater boilers: Useful efficiency*			
At maximum capacity and high temperature operation (*)	P_4	121.6	kW	At maximum capacity and high temperature operation (*)	η4	87.6	%
At 30% of maximum capacity and low temperature operation (**)	P_1	40.6	kW	At 30% of maximum capacity and low temperature operation (**)	n1	97.6	%
Auxiliary electricity use				*Other items*			
At full load	el_{max}	207	W	Heat loss during standby	P^{stby}	0.117	kW
At partial load	el_{min}	27	W	Ignition burner power consumption	P_{ign}	1.94	kW
In standby state	P_{SB}	3	W	Sound intensity level, indoor	L^{WA}	66.3	dB
				Release of nitrogen oxides	NOx	55.2	mg/kWh
Contact info	ALARKO CARRIER SAN. TİC. A.Ş., GOSB - Gebze O.S.B., Şahabettin Bilgisu Cad., 41400, Gebze/Kocaeli/Turkey						
(*) High temperature operation means 60°C water temperature on return to the boiler and 80°C water temperature on outlet from the boiler. (* *) Low temperature means 30°C for condensing boilers, 37°C for low temperature boilers, and 50°C for other types of appliances in operation boiler return.							

Model(s):			ALDENS WM-150, ALDENS WS-150				
Condensing Boiler:			YES				
Low Temperature Boiler:			NO				
B11 Boiler:			NO				
Cogeneration Room Heater:			NO	**Additional heater** NO			
Combined Heater:			NO				
Item	**Symbol**	**Value**	**Unit**	**Item**	**Symbol**	**Value**	**Unit**
Nominal heat power	PN	148	kW	Seasonal room heating energy efficiency	ns	92	%
For room heater boilers and combined heater boilers: Useful heat capacity				*For room heater boilers and combined heater boilers: Useful efficiency*			
At maximum capacity and high temperature operation (*)	P_4	140.7	kW	At maximum capacity and high temperature operation (*)	η4	87.4	%
At 30% of maximum capacity and low temperature operation (**)	P_1	46.7	kW	At 30% of maximum capacity and low temperature operation (**)	n1	96.7	%
Auxiliary electricity use				*Other items*			
At full load	elmax	279	W	Heat loss during standby	P^{stby}	0.121	kW
At partial load	el_{min}	29	W	Ignition burner power consumption	P_{ign}	2.16	kW
In standby state	P_{SB}	3	W	Sound intensity level, indoor	L^{WA}	67.4	dB
				Release of nitrogen oxides	NOx	54.6	mg/kWh
Contact info	ALARKO CARRIER SAN. TİC. A.Ş., GOSB - Gebze O.S.B., Şahabettin Bilgisu Cad., 41400, Gebze/Kocaeli/Turkey						
(*) High temperature operation means 60°C water temperature on return to the boiler and 80°C water temperature on outlet from the boiler. (* *) Low temperature means 30°C for condensing boilers, 37°C for low temperature boilers, and 50°C for other types of appliances in operation boiler return.							

2.4. Overview and Sub-Components

2.4.1. ALDENS WM/WS-65

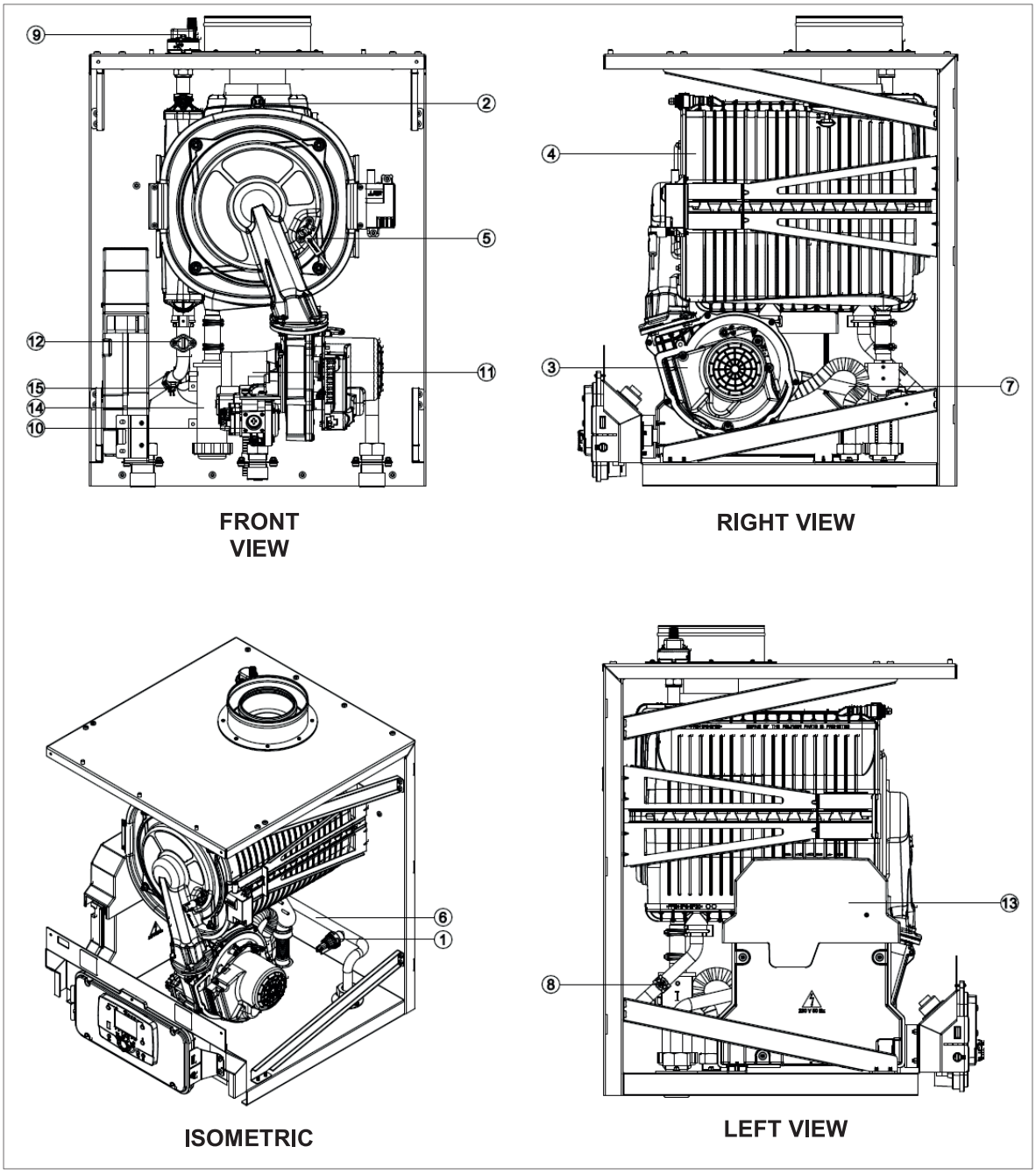

No	Component
1	PRESSURE SENSOR
2	FLUE GAS TEMPERATURE SENSOR
3	FAN
4	EXCHANGER
5	IGNITION + IONIZATION ELECTRODE
6	BOILER RETURN PIPE
7	BOILER OUTLET PIPE
8	BOILER RETURN TEMPERATURE SENSOR
9	AUTOMATIC AIR RELEASE PURGE 1/2"
10	GAS VALVE
11	VENTURI
12	LIMIT THERMOSTAT
13	MAIN BOARD MOUNTING
14	COND. SIPHON AND DRAIN HOSE
15	BOILER OUTLET TEMPERATURE SENSOR

2.4.2. ALDENS WM/WS – 85/105/30/150

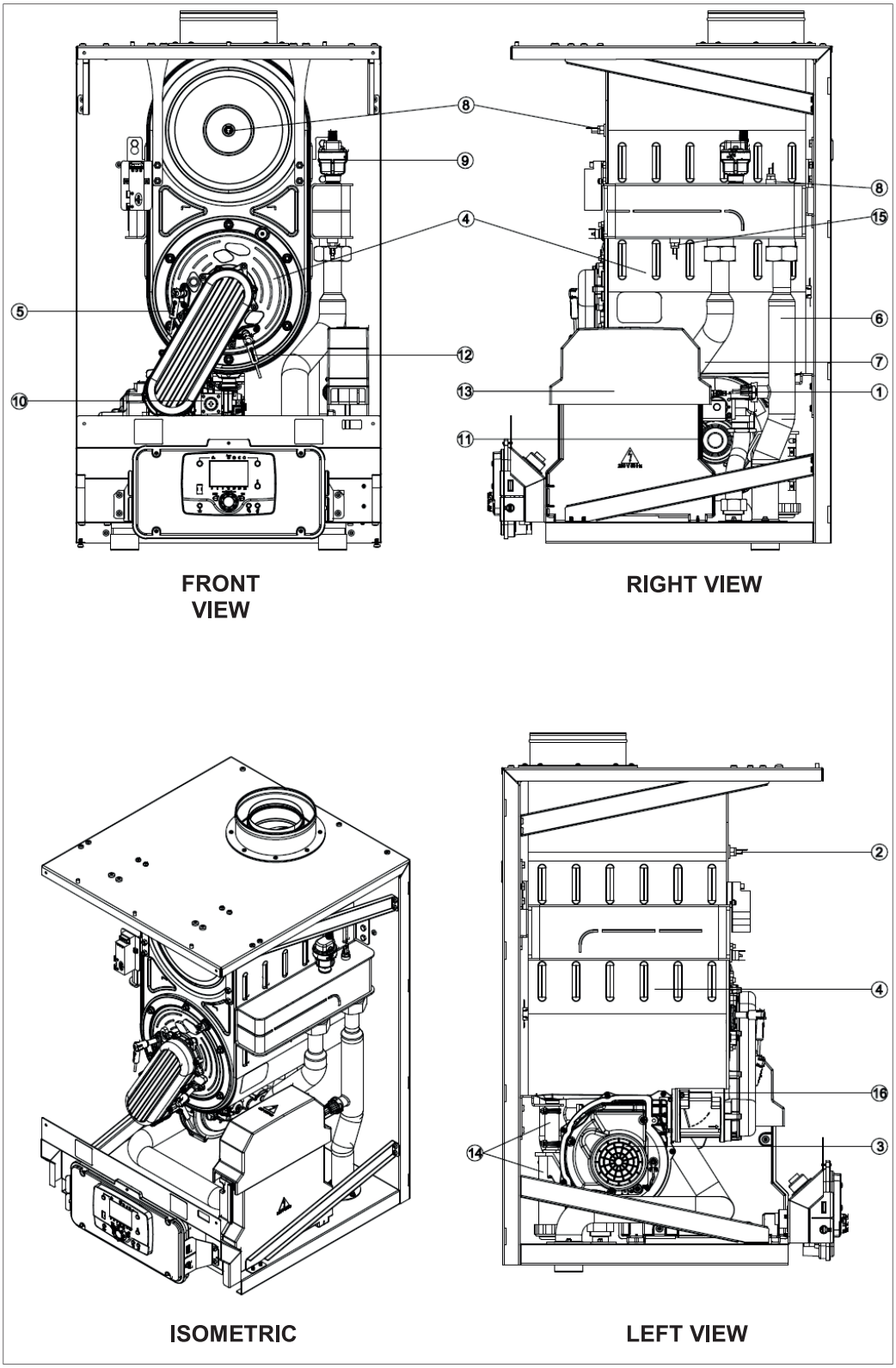

No	Component	No	Component
1	PRESSURE SENSOR	9	AUTOMATIC AIR RELEASE PURGE 1/2"
2	FLUE GAS TEMPERATURE SENSOR	10	GAS VALVE
3	FAN	11	VENTURI
4	EXCHANGER	12	IONIZATION ELECTRODE
5	IGNITION ELECTRODE	13	MAIN BOARD MOUNTING
6	BOILER RETURN PIPE	14	CONDENSATE SIPHON AND DRAIN HOSE
7	BOILER OUTLET PIPE	15	BOILER OUTLET TEMPERATURE SENSOR
8	BOILER RETURN TEMPERATURE SENSOR	16	FLAP FOR WASTE GAS BACK FLOW INHIBITOR

2.5. What You Need to Know Before Assembly

2.5.1. Shipment List

Your ALDENS condensing boiler is unpacked, it will have the following parts:

ALDENS condensing boiler	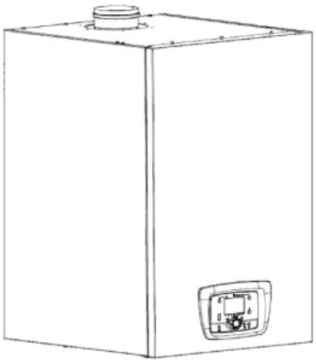 x1
Boiler hanger plate	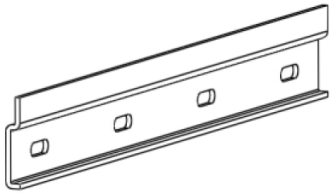 x1
Safety valve and fittings	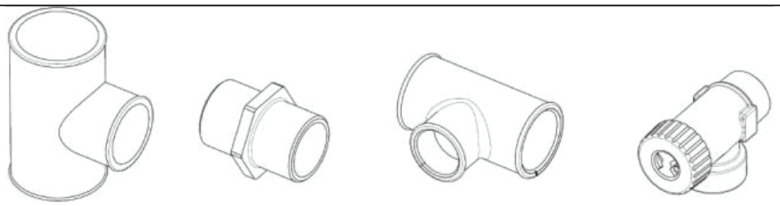 x1 x1 x1 x1
Lag screw + dowel	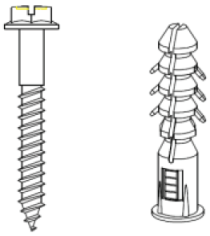 x4 x4
Assembly and operating manual	 x1

All products in the External Accessories list, starting from the next page, are available through Alarko authorized dealers.

2.5.2. External Accessories

Pump	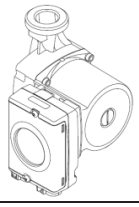 For detail see Section 2.6 Water Management
Pump Connection Set ALDENS WM/WS-65	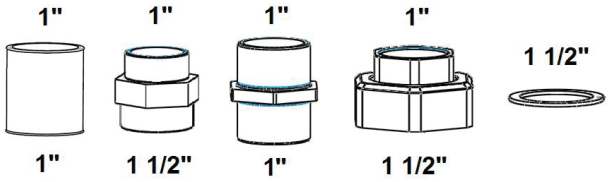 1" 1" 1" 1" 1 1/2" 1" 1 1/2" 1" 1 1/2" x1 x2 x1 x2 x2
Pump Connection Set *ALDENS WM/WS-85,* *ALDENS WM/WS-105*	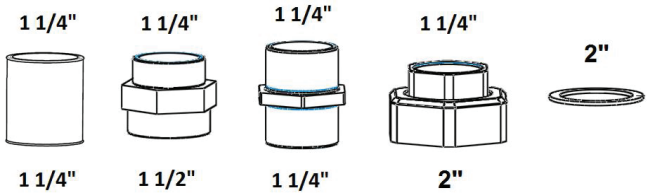 1 1/4" 1 1/4" 1 1/4" 1 1/4" 2" 1 1/4" 1 1/2" 1 1/4" 2" x1 x2 x1 x2 x2
Pump Connection Set *ALDENS WM/WS-130,* *ALDENS WM/WS-150*	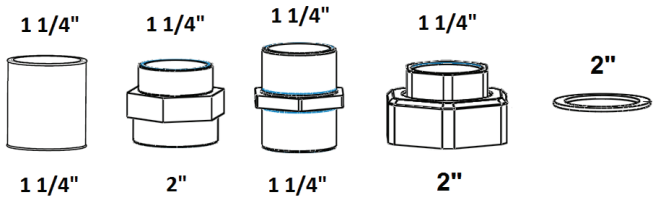 1 1/4" 1 1/4" 1 1/4" 1 1/4" 2" 1 1/4" 2" 1 1/4" 2" x1 x2 x1 x2 x2
AGU2.550A109 **Single Expansion** **Module Set**	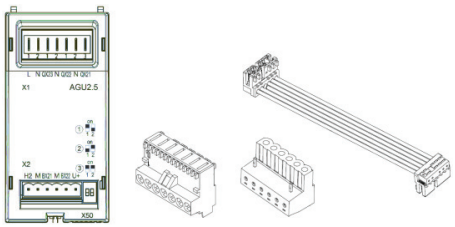 x1 x1 x1 x1
AGU2.550A109 **Dual Expansion** **Module Set**	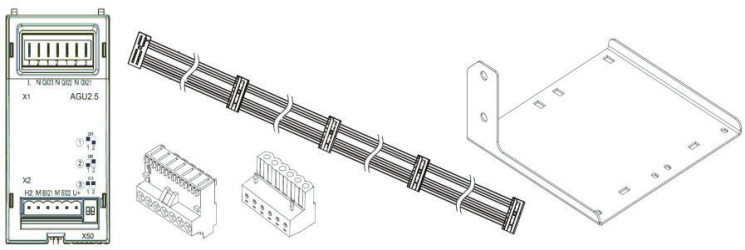 x2 x2 x2 x1 x1

AGU2.550A109 Triple Expansion Module Set	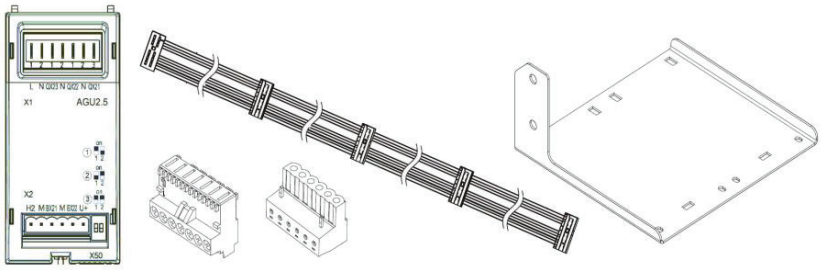 x3 x3 x3 x1 x1
Boiler Hanger Console Set	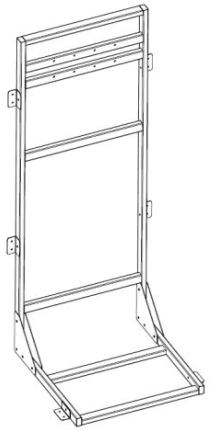 • Modular and can be reproduced by adding the back to the back or side to side. • Used on walls that cannot bear the weight of the boiler. • Supplied as a single console set.  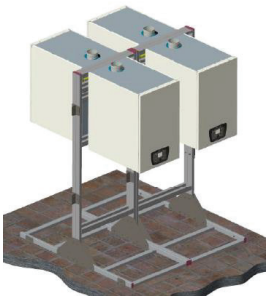
QAZ36.522/109 Immersion Type Sensor	 For boiler and balance container (PVC, 2m)
QAZ36.481/101 Immersion Type Sensor	 For solar collector (Silicone, 1.5m)
QAD36/101 Clamp Type Sensor	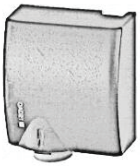 For blend circuit and separator plate exchanger
QAC34/101 Outside Air Sensor	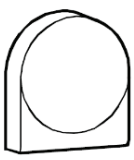

QAA55.110/101 Indoor Room Unit	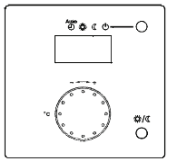
OCI345 Cascade Module Set	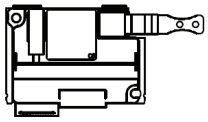 x1 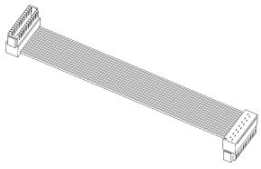 x1
AVS37.397/509 Service Interface	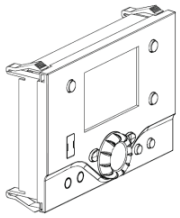 x1 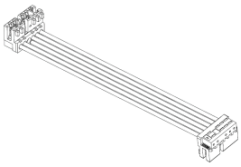 x1 For commissioning and setting follower boilers
OCI700.1 Service Tool	
Balance Container	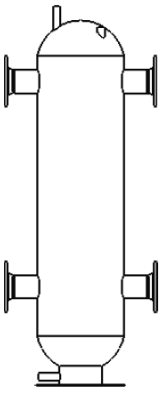 It must be selected in accordance with the installation.
Expansion Tank	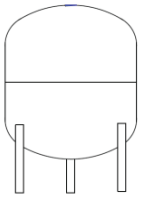 An expansion tank with a capacity of 24 liters should be installed in each boiler. Secondary circuit (installation side) expansion tanks should be selected by the installation company according to the installation needs.

Air Separator	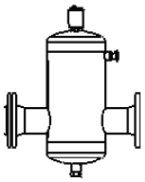
Sludge (Sediment) Holder	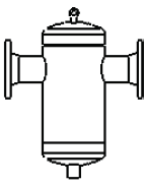
Neutralizer (150 kW 03/150)	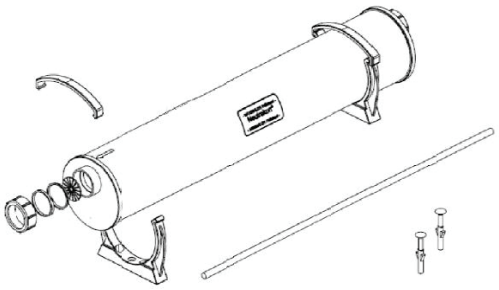
Neutralizer (300 kW 04/BGN)	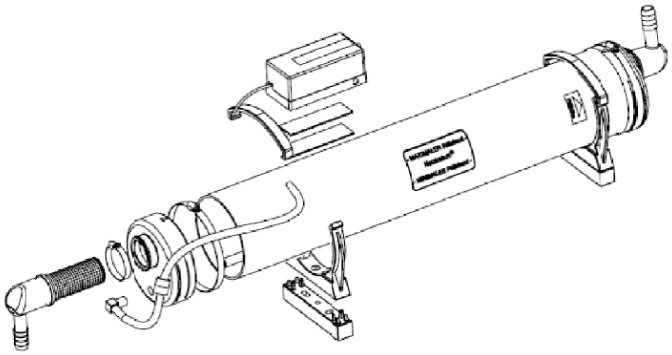
Neutralizer (650 kW 08/BGN)	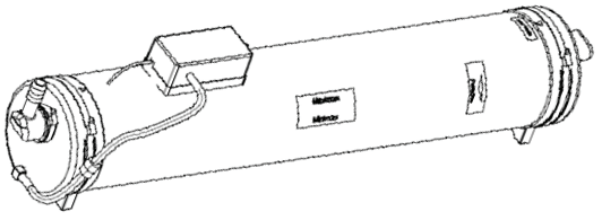
Neutralizer Container Inlet Elbow (40 mm)	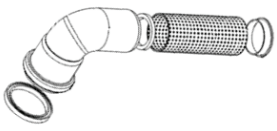

2.5.3. Appliance and Installation Connection Dimensions (Same for Leading and Follower Boilers)

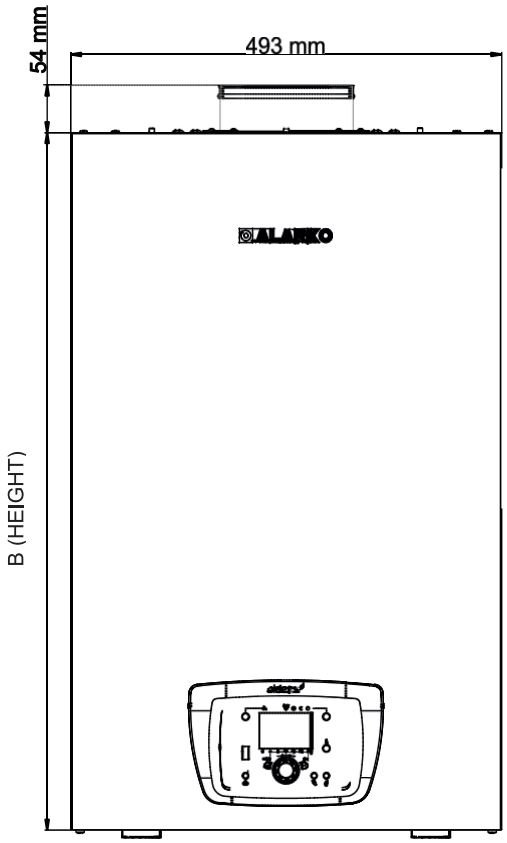

FRONT VIEW

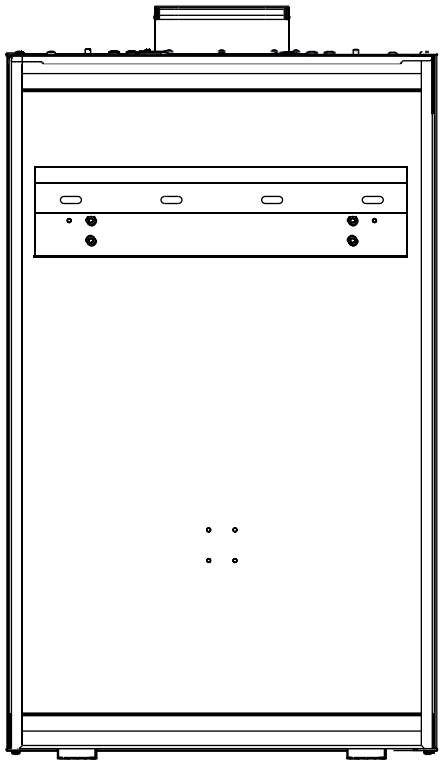

REAR VIEW

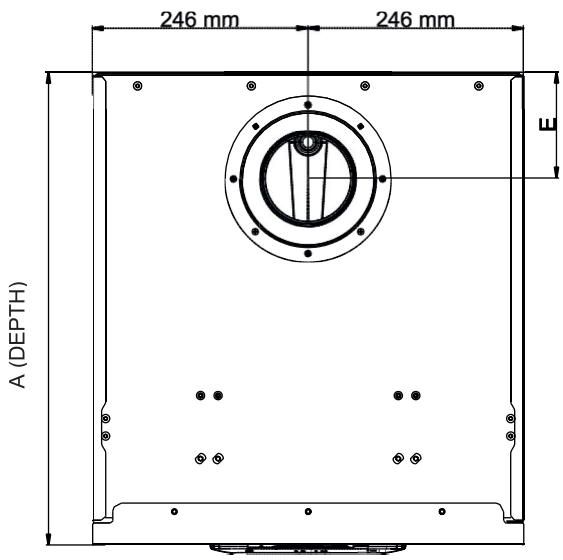

TOP VIEW

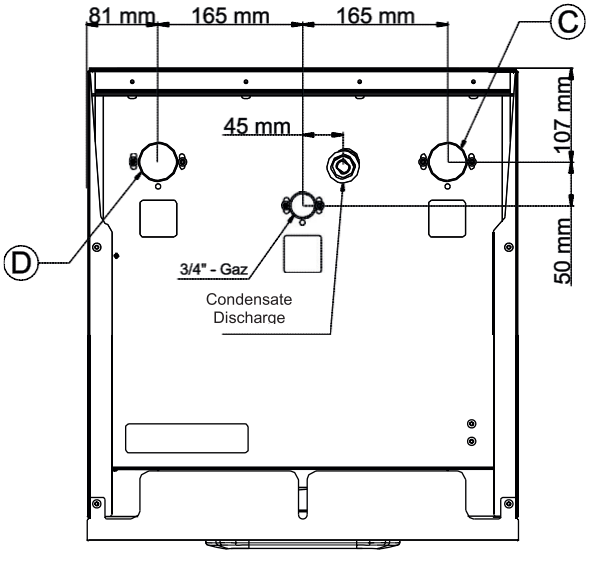

BOTTOM VIEW

BOILER MODEL	A DEPTH (mm)	B HEIGHT (mm)	C - BOILER OUTLET DIMENSION	D - BOILER RETURN DIMENSIO	E – FLUE CENTER (mm)
ALDENS WM/WS-65	540	627	G 1”	G 1”	157
ALDENS WM/WS-85, ALDENS WM/WS-105, ALDENS WM/WS-130	540	797	G 1 ¼”	G 1 ¼”	122
ALDENS WM/WS-150	635	797	G 1 ¼”	G 1 ¼”	122

2.5.4. Assembled Dimensions in Cascade System

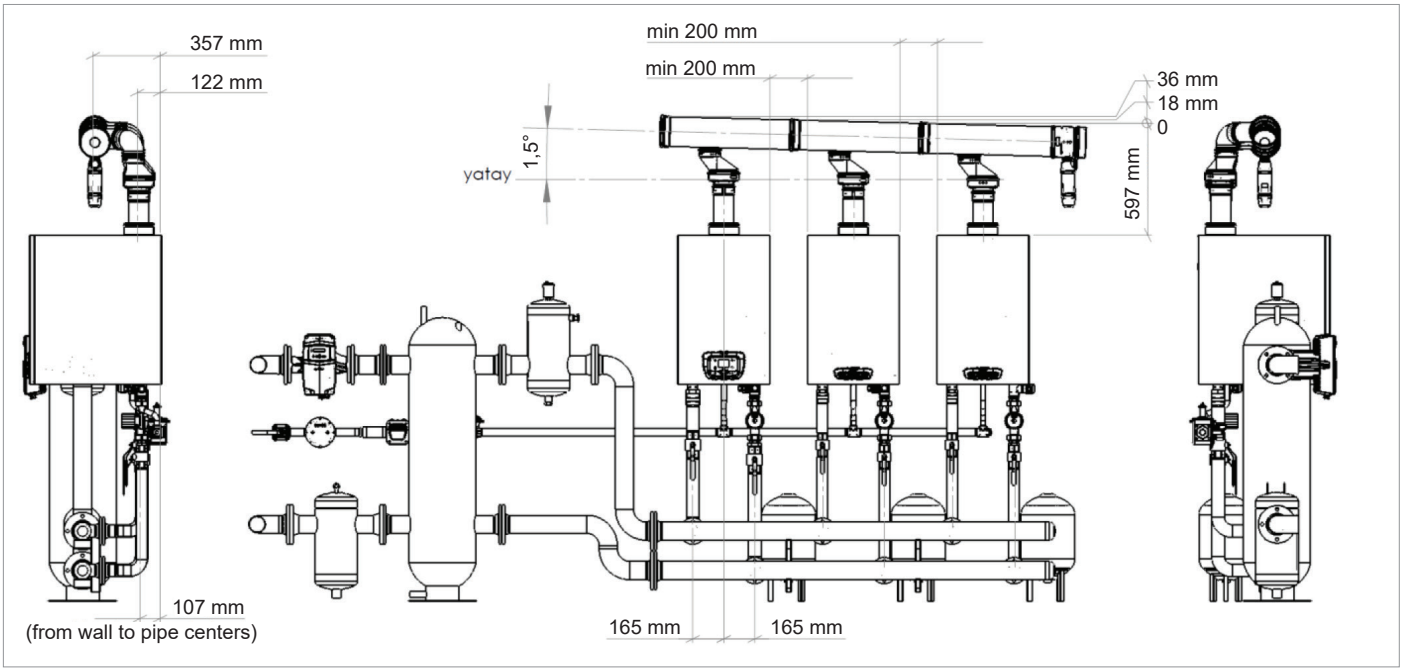

The slope for the collector to be connected in the cascade system assembly will be approximately 1.5 degrees. Each added collector increases the height by 18 mm if it is connected with a slope of 1.5 degrees.

2.5.5. What is Required in the Primary Circuit of the Installation for the Long Life and Correct Operation of Your Appliance

Whether you are going to operate your condensing boiler as a singular or as a cascade, the system must have the following elements. This is a requirement for the long life of your system and the warranty coverage of your appliance. These accessories are not supplied with the boiler.

- Air Separator
- Balance container or Plate Exchanger (Plate exchanger is used in non-oxygen barrier plastic piped installations and in systems where water conditions are not appropriate)
- Sludge / Sediment Holder
- Expansion Tank (separate for each boiler)

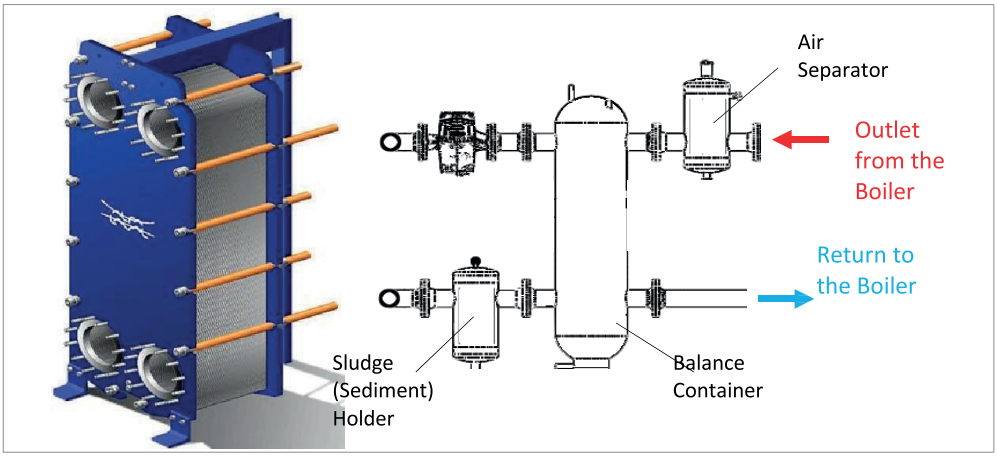

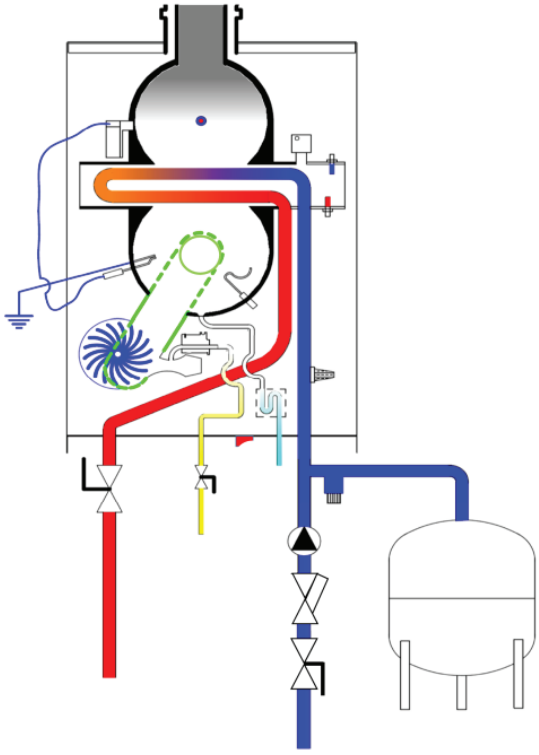



There should **NOT** be a shut-off valve in the direct circuit between the expansion tank and the boiler.

Additional Issues Regarding the Installation

- Each boiler must have its own boiler recirculation pump. The pump selection for your ALDENS Condensing Boiler to work together is included in the following sections. Necessary details and relationships about boiler exchanger and pump discharge height can also be found in the same section.
- Condensate (from the heat exchanger or flue gas/collector installation) is acidic and must be neutralized before discharge. Contact an Alarko Carrier authorized service for assistance and further information.
- An expansion tank with a capacity of 24 liters should be installed in each boiler. Secondary circuit (installation side) expansion tanks should be selected by the installation company according to the installation needs.

2.5.6. Minimum Distances to be Left Between Wall and Boiler

The minimum distances to be left from the floor, ceiling, and the right and left sides of the appliance in the assembly of ALDENS Condensing Boiler are specified by considering the requirements for the personnel intervening in case of necessary maintenance to operate ergonomically by opening the covers of the boiler comfortably.

The LMS14 boiler control board has a frost protection function. In order for this function to be active, the system must have frost protection enabled via parameter settings and also the system must have a continuous electrical connection. Even in the places designated as a boiler room, it is very rarely possible for water to freeze, so it is recommended to take this into consideration.

If a hermetic flue set with concentric waste gas and fresh air suction is used, attention should be paid to the distances from both the roof and the edges of the sloping roof in order to prevent the exhaust gas from mixing with the suction air or to cause health problems to humans and other living things.

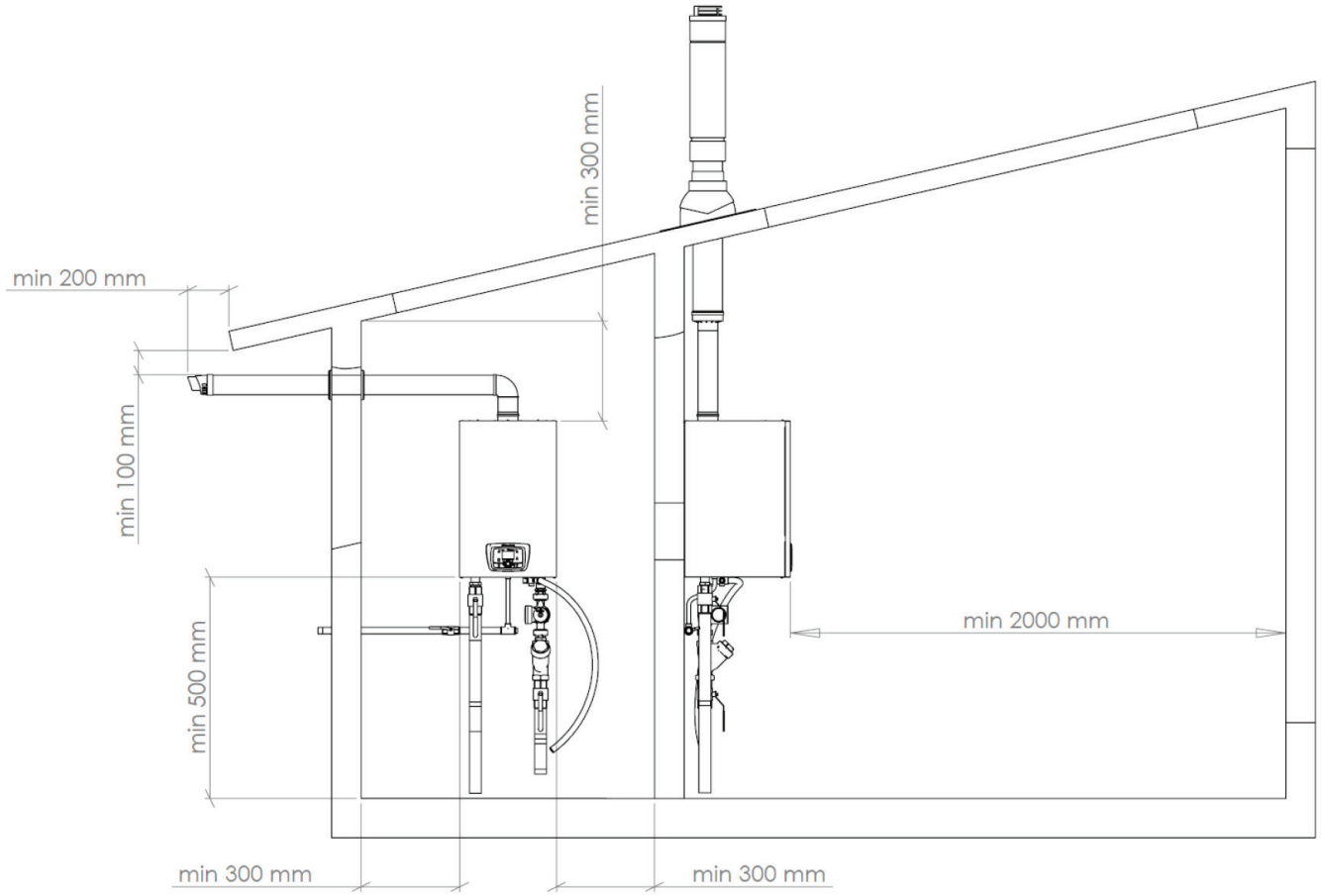
min 300 mm
min 200 mm
min 100 mm
min 500 mm
min 2000 mm
min 300 mm
min 300 mm

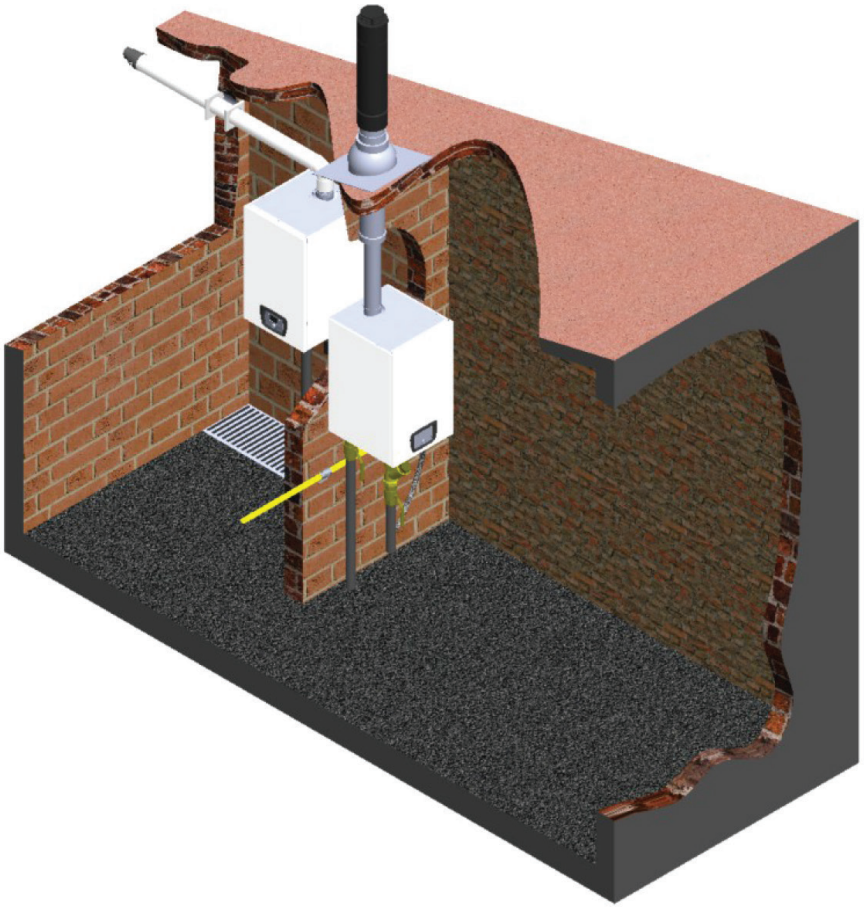

2.5.7. Mechanical Circuit Diagrams (Hydraulic, Gas, Waste Gas)

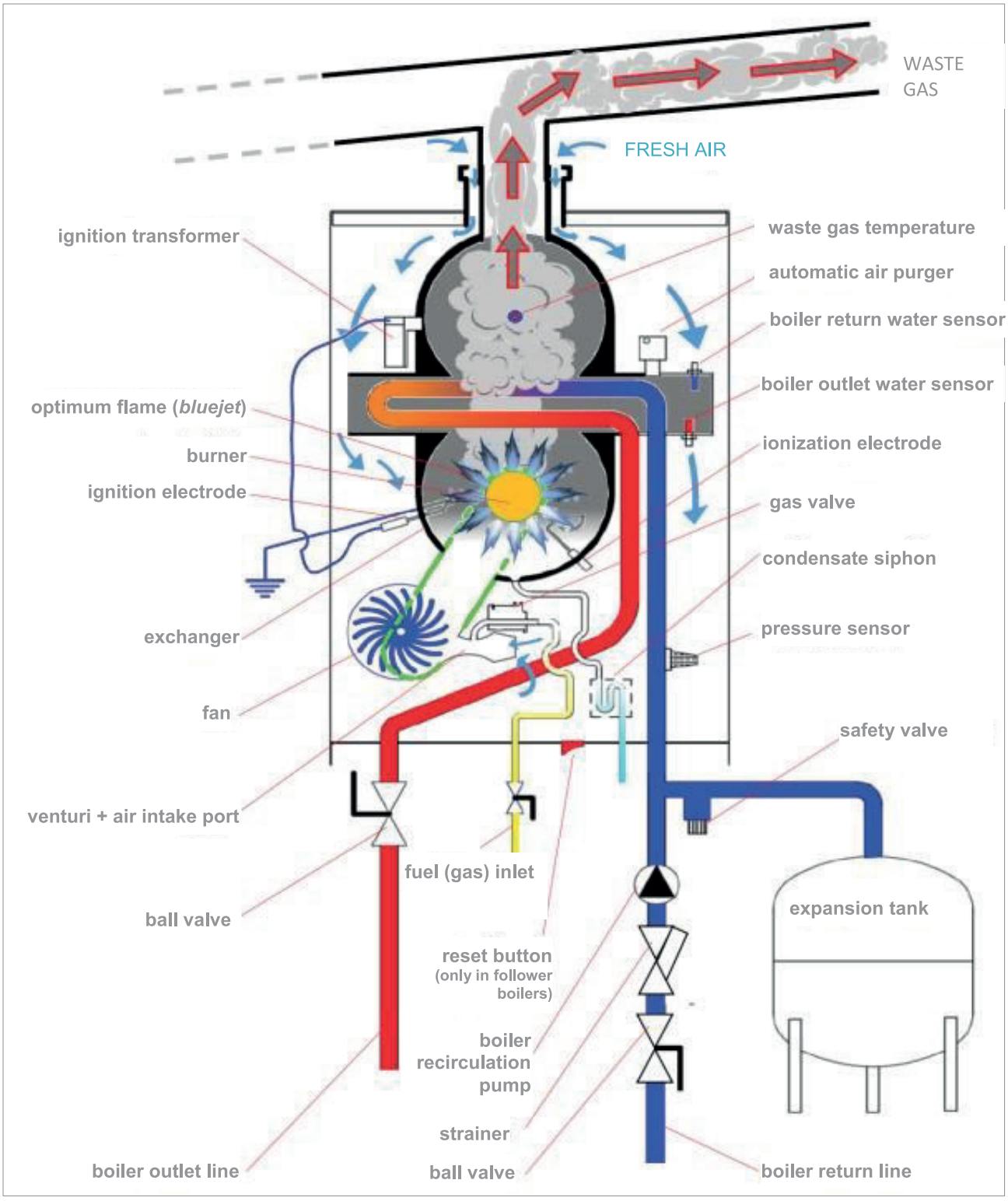

The above figure shows the schematic system diagram showing the functions of ALDENS Condensing Boiler in the simplest way. The flue system is not only a system that discharges waste gas. While performing this function, it may also be necessary to provide the system with the fresh air required for combustion in the combustion chamber of the boiler. All this is possible by installing the correct and regulations-compliant flue installation. Detailed information on the subject is given in “Section 3.5 Flue Types and Elements”.

2.6. Water Management

2.6.1. Circulation Pump Specifications and Characteristic Curves

The list of pumps recommended for use with the boiler is given below. The pumps in this list are supplied with connection pipes as a set. Since the recirculation pump is located outside the appliance, high energy class pumps have been selected in accordance with the new ErP regulations. The pumps are supplied by the boiler board (LMS14) (230VAC) and driven by the pwm signal if modulated.

There is no need to reach the boiler board for connections, they can be made easily to the terminals behind the boiler board.

The pump must be capable of circulating between the boiler and the balance container when appropriate installation diameters are used. In the cascade system, when using a balance container or a plate heat exchanger, the pumping heights required according to the aforementioned ALDENS boiler model change, so it is necessary to make the appropriate selection according to the conditions. The LMS14 boiler control board adjusts the pump speed so that the difference between return and outlet water temperatures is 20°C.

Water Flow Rate **[m^3/h]**	Model	dP boiler (mSS)	Constant pressure/ variab le pressure adjustable pump (mSS)	If plate exchanger is used	If balance container is used	If balance container is used
2,82	ALDENS 65	5,44	6,94	9,44	Optima 3/7	Optima 3/12
3,59	ALDENS 85	5,6	7,1	9,6	Optima 2/3/4/10	Optima 3/12
4,36	ALDENS 105	5,6	7,1	9,6	Optima 2/3/4/10	Optima 3/12
5,4	ALDENS 130	4,5	6	8,5	Optima 2/3/4/10	Optima 3/12
6,38	ALDENS 150	4,7	6,2	8,7	Optima 3/12	Optima 3/12

The total water pressure loss curves of the appliance according to the ALDENS boiler model are as follows.

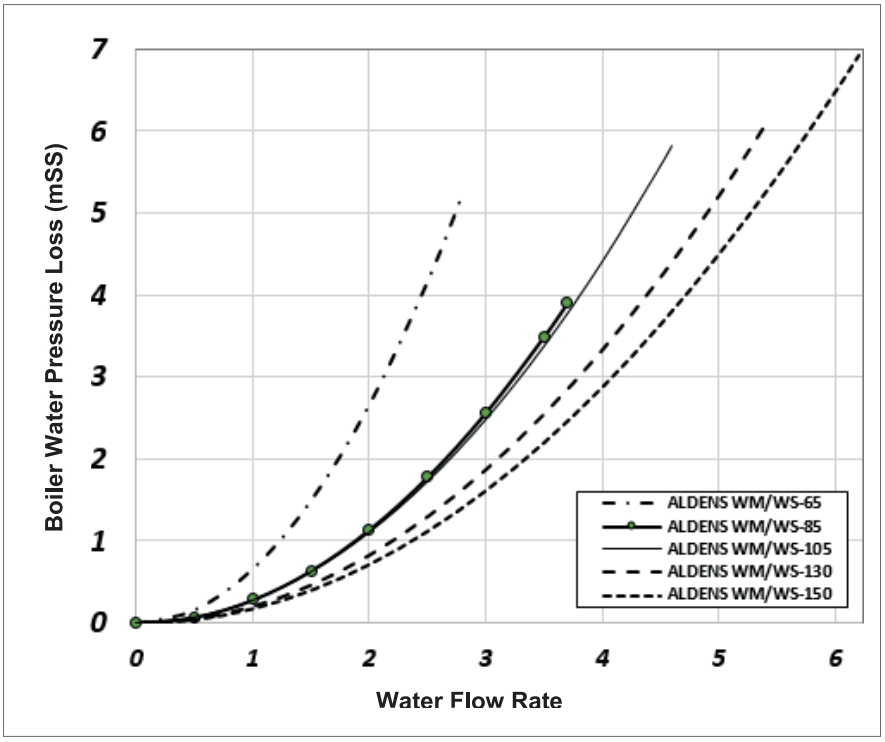

Pumping Heights

Optima BMS 2/10-18, 3/10-180, 4/10

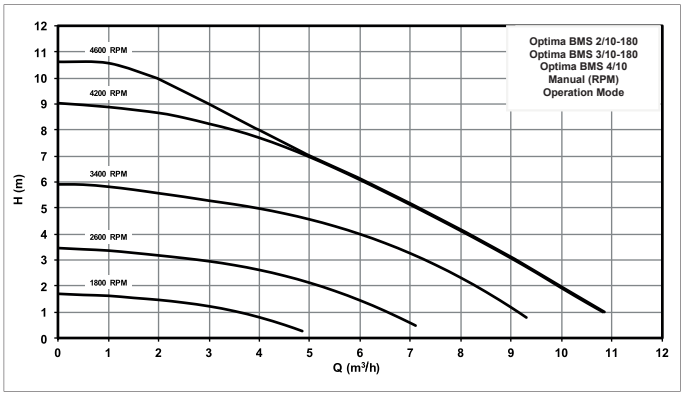

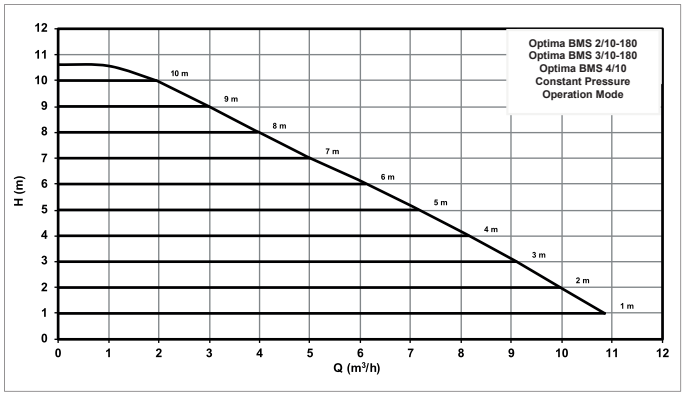

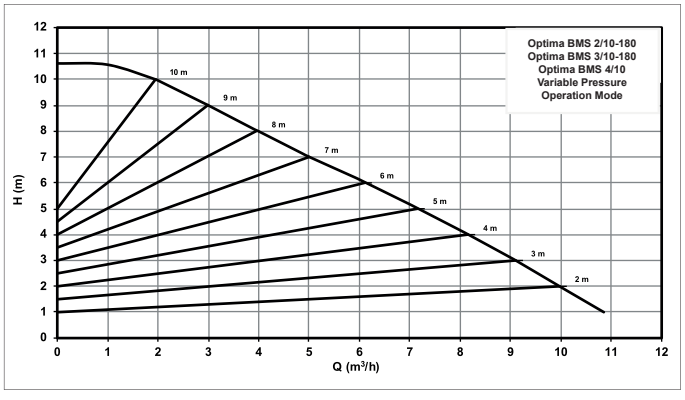

Optima BMS 3/7-180

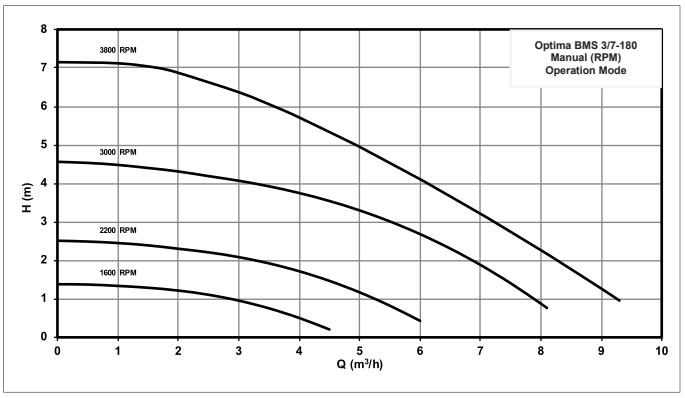

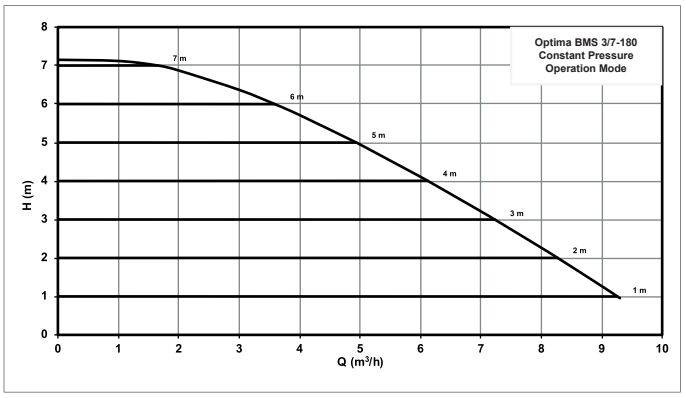

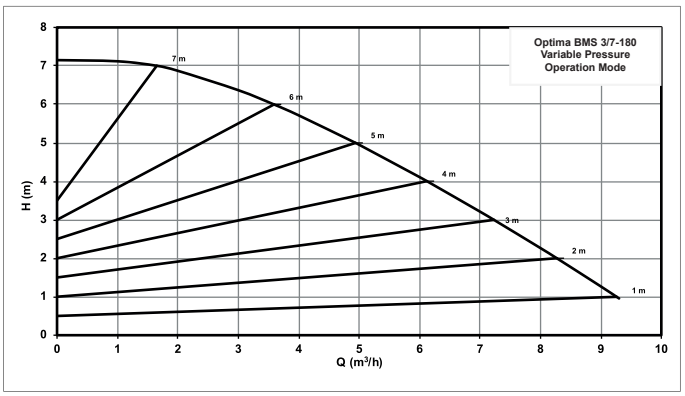

Optima BMS 3/12-180

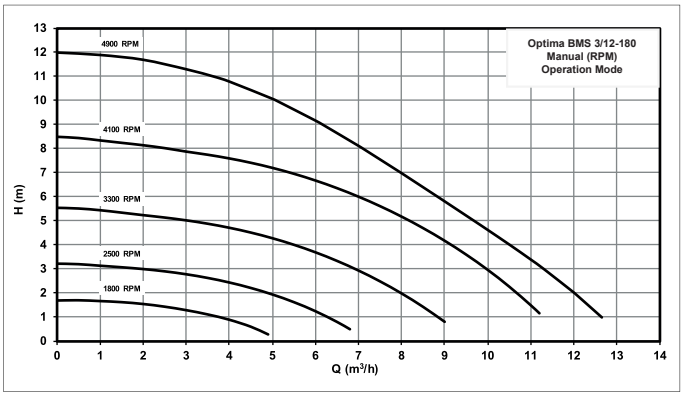

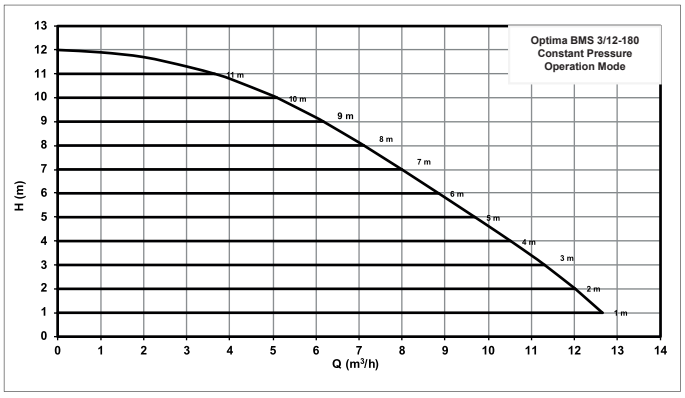

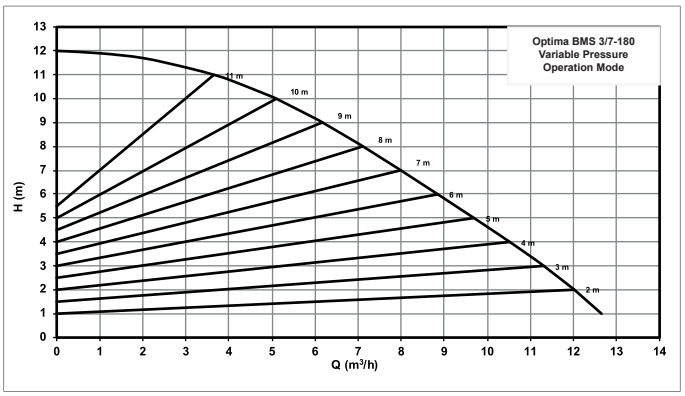

2.6.2. Water Pressure Monitoring and Control System

There are two water pressure Hx monitoring and evaluation systems defined as “Static Pressure Management (SPM)” and “Dynamic Pressure Management (DPM)” within the LMS14 boiler card. The water pressure management function, which is the combined use SPM and DPM, is a priority of boiler control. If necessary, it takes the boiler to low flame (LF / minimum capacity) operation, stops the boiler, prevents the boiler from starting (start prevention) and/or puts the boiler in the position called lockout.

Static Pressure Management (SPM)

When the excessively low or excessively high value in the water pressure returns to normal, the boiler is released by the (SPM) function without time delay. There are maximum, minimum, and critical minimum values allowed.

In the following graph, the operating modes of SPM as a result of changes in water pressure due to reasons other than boiler depending on time are exemplified. The switching differential serves as some safety difference in the transition of water pressure from abnormal values to normal range.

When the maximum permissible water pressure is reached, LMS14 closes the gas valve, but the circulator does not cut the power of the pump. In other words, water circulation continues. When the pressure starts to drop again, the boiler starts again and leaves the maximum water pressure value on a certain safety band (switching differential). If there is a pressure lower than the “Minimum water pressure” value but higher than the “Critical Minimum water pressure” value, it reduces the boiler capacity by 20% compared to its current value. If the water pressure rises, the boiler can move to load stages higher than the minimum load if pressure is created that will leave the “minimum water pressure” down only to the “switching differential” level. If the water pressure of the boiler running between the minimum and the critical minimum – and in low flame – continues to decrease further and falls below the “critical minimum water pressure” value, then LMS14 cuts the power of both the gas valve and the boiler (circulator) pump.

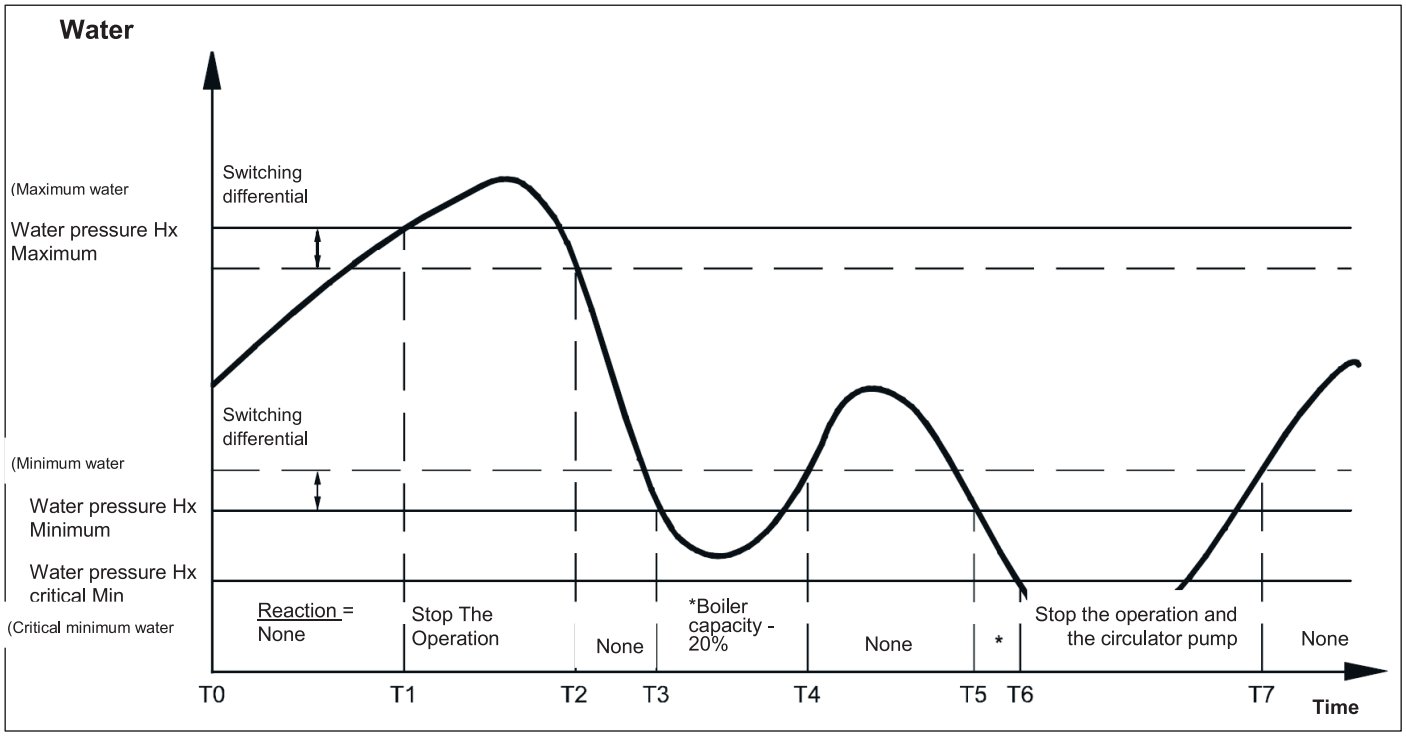

The reading of the LMS14, which can control three different heating circuits at the same time, with the water pressure sensor, can be displayed on the screen with the parameters coded 9005, 9006, or 9007.

We need to be at the engineer level first.

The value related to the sequence **Engineer - Consumer identification - 9005** can be read. ALDENS condensing boiler default static pressure setting values are as follows:

- **Critical Minimum Water = 0,8 bar**
- **Minimum Water Pressure = 1 bar**
- **Maximum Water Pressure = 6 bar**

Only and primarily Alarko Carrier authorized services have the necessary knowledge, equipment, and authority about the water management and pressure control of your ALDENS Condensing Boiler manufactured in Alarko Carrier production facilities.

Dynamic Pressure Management (DPM)

This function is used to monitor and evaluate the changes expected to occur in the system water pressure due to the activation of the boiler circulator pump or the heating/domestic water circuit circulator pumps in a controlled manner and primarily to control the system water pressure mainly from the circulator pump.

If the LMS14 does not read a valid pressure value after the pump operation signal is received, the Dynamic Pressure Management (DPM) function will not allow the boiler to start with the “start prevention” feature or will put the system in lockout mode (2490 - Dyn press superv sh’down).

The LMS14 boiler board starts a water pressure control process that will start after Tdelay (start-of-reading delay time) and last up to DPM time (2495) after receiving the pump on signal. It calculates the absolute value of the difference between the pressure and the pressure before pump operation by taking the time average with 200 milliseconds interval sampling and checking whether it remains between the minimum and maximum limits of the DPM differential.

If the system does not meet the pressure requirements during the start protection, it will try to restart if the “start protection error repetition number” has not been reached yet. If reached, the system will switch to lockout state. Even if the pump is running during the start protection, it will stop in the last seconds (Tdelay + 2 seconds later) of the start protection. Parameter 2490 **(Dyn press superv sh’down)** is used for the reactivation of the system entering the lockout mode.

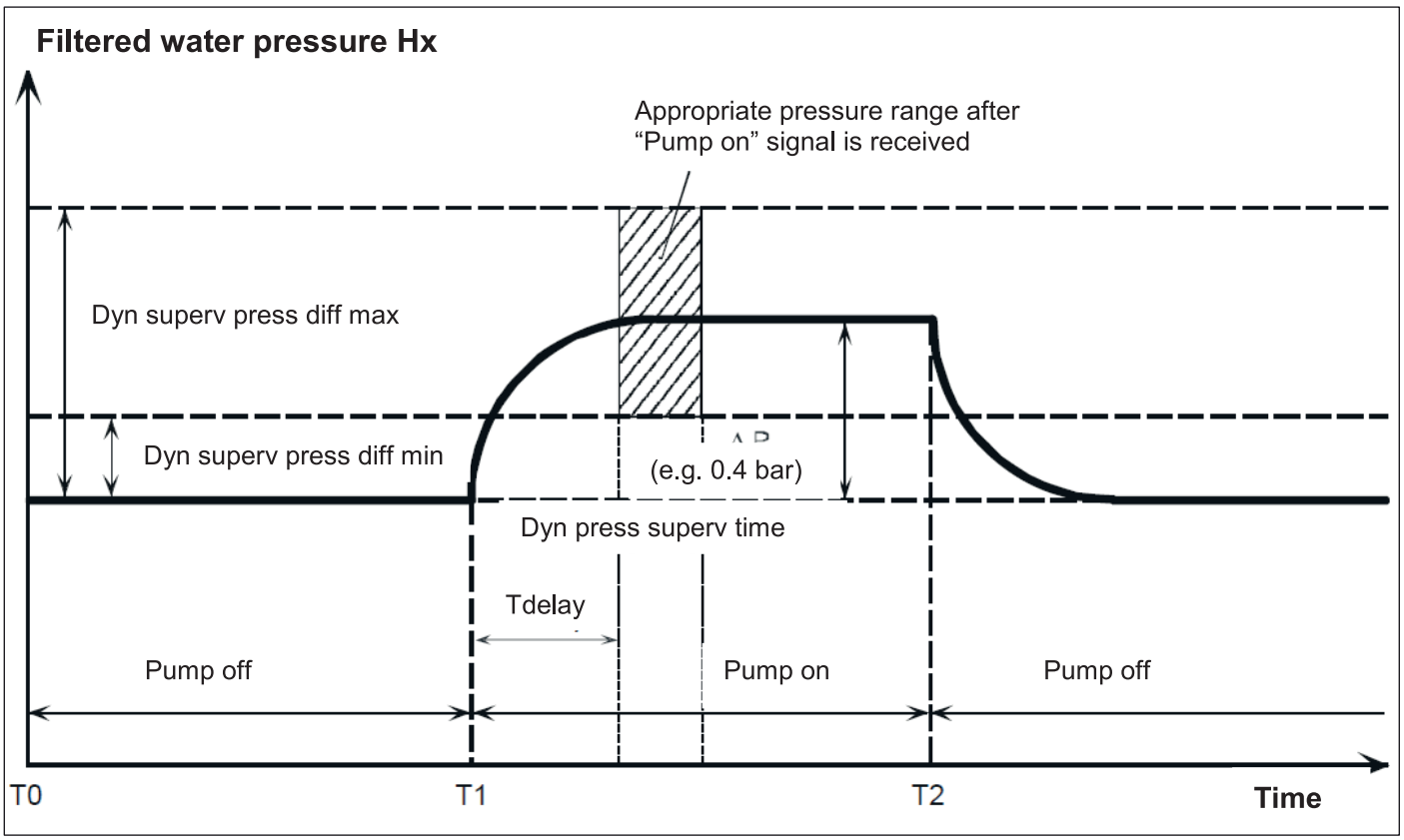

Parameter 8327 shows the dynamic pressure value in the system. This value can be read as well.

First of all, we need to be at the engineer level.

Engineer - Consumer identification - 8327

2.6.3. Filling / Draining of Water in the Installation

It is necessary to know both how to add water to the installation (also called water pumping) or how to add water or discharge it to disable the system for an efficient operation.

- The permissible water pressure level for ALDENS WM/WS-85, 105, 130, and 150 appliances is a maximum of 6 bar (the standard equipment of your appliance is a safety valve allowing a maximum of 6 bar).
- The permissible water pressure level for ALDENS WM/WS-65 appliances is a maximum of 4.5 bar (the standard equipment of your appliance is a safety valve that allows a maximum of 4.5 bar).
- In order for your boiler to operate efficiently, the cold water pressure must be between 1 and 1.5 bar.
- The installation pressure should be increased when pressure falls below this.
- There must be a drain tap in the water circuit. It is essential that the tap in question is ready for use and that there are no obstructive blind tap etc. elements on the drainage side..

2.6.4. Notes on Hardness, Conductivity, and Calcification of Water

It is necessary to clean the installation before filling the heating circuit installation with water. In the first filling of the system, fill the system with potable water.

- If the water supplied to the system does not have these features, it is also necessary to install a water treatment system.
- Treated water must be used when replenishing the heating circuit water as a result of water shortages in the closed circuit.
- The water used should be in the range of 7.5 < pH < 9.5 after the first cycle for initial filling and cleaning of the installation and in a permanent operation to be reached.
- If aluminum material is used in the installation (e.g. aluminum radiator) pH should be < 8.5.
- The total hardness (TH) value allowed for the water to be used in the water circuit shall be defined according to the VDI 2035 standard and shall be in the range of 5 Fr < TH < 15 Fr.
- The maximum total hardness and the corresponding maximum conductivity vary according to the appliance capacity and installation volume.

Total Installed System Power (kW)	Hardness	
	°f (Fr)	*mol/m³*
<600	5 – 15	0.5 – 1.5
>600	5 – 7	0.5 - 0.7

2.7. Over Delta T (ΔT) Prevention System

It is not desirable that the difference between the outlet and return water temperatures of your appliance be higher than a certain value. The main reason for this is to prevent the heat exchanger from being exposed to thermal stresses. This function can reduce the current operating capacity of your appliance by 20%, reduce it to the minimum value or cause **lockout – start prevention** for safety purposes due to its design.

The exchanger protection function performs the following operations if the temperature between the outlet and return water exceeds the specified limits.

Parameter	**Description**	**Description**
[3916.1]	*Flow-return max. difference*	ΔT > [MaxDeltaOutletReturn]: *Power reduced by 20%*
- Boiler power is reduced by 20% if the ΔT value is greater than the [*maximum permissible ΔT*] value.		
[6604.1]	*SLT T diff low-fire*	ΔT > [MaxDeltaOutletReturn] + [STB Delta-T Offset Partial Load]:
- Boiler power is minimized if the ΔT value is greater than the [*maximum permissible ΔT*] + [*6604.1*] value.		
[6605.1]	*SLT T diff start prev*	ΔT > MaxDeltaOutletReturn + STB Delta-T Offset start prevention
[3921.1]	*Number of d-T errors in 24h*	
- Boiler power switches to “start prevention” mode if the ΔT value is greater than the [*maximum permissible ΔT*] + [*6605.1*] value.		

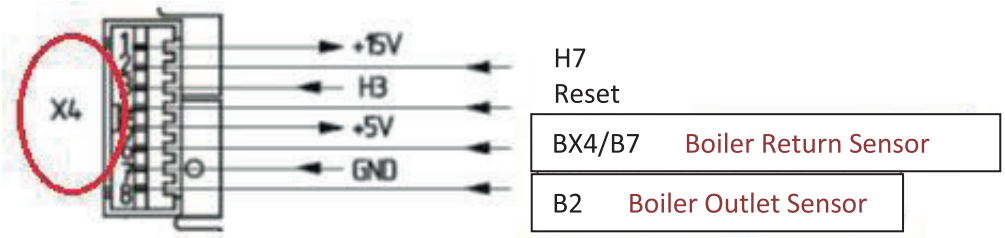

“Boiler outlet and return sensor connections on the main board (LMS 14).”

3. UNPACKING AND ASSEMBLY

3.1. General and Safety Warnings

3.1.1. Installation Safety Warnings and Information

There is a vital issue to note about the assembly of your ALDENS Condensing Boiler. **"Neither a manual nor an automatic valve must be installed"** in the section between the circulation pump and the boiler on both the hot water outlet circuit and the cold water return circuit.



In such a case:

1) Open either water outlet or return line valves immediately (make sure to allow water passage).

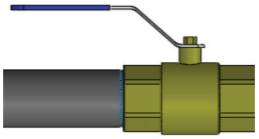

Attention: Valve key and the line must be parallel!

2) If the valves in question are open, leave them as they are.
3) If the appliance is operating, be sure to stop it (off position/standby) and then close the fuel (gas line) valve (turn it in the direction of the red arrow as shown in the left picture).
4) Always contact an authorized Alarko Carrier service for assistance before restarting.

You can visit www.alarko-carrier.com.tr for a list of authorized services.

As it can be understood from the measures listed for the above-mentioned situation, in order for the safety valve included in the packaging of your appliance to function, the correct and safe sequence by moving away from the boiler must be as follows:

i. Assembly of Safety Valve and Expansion Tank Connection

ii. Circulation Pump

iii. Strainer

iv. Valve

When the packaging of your ALDENS Condensing Boiler is opened, a number of safety valve assembly accessories other than your appliance will be included in the package. Package contents are different for ALDENS WM-65 and ALDENS WS-65. This set is the accessories inside the zipper bag and consists of a total of four parts:

For ALDENS WM/WS-85, 105, 130, 150 models:

- TE Reduction 1 ¼” – 1” – 1 ¼”
- Nipple 1” – 1”
- TE Reductio 1” – 3/4” – 1”
- 6 bar safety valve

For ALDENS WM/WS-65 models:

- TE Reduction 1” – 1” – 1”
- Nipple 1” – 1”
- TE Reductio 1” – 3/4” – 1”
- 4.5 bar safety valve

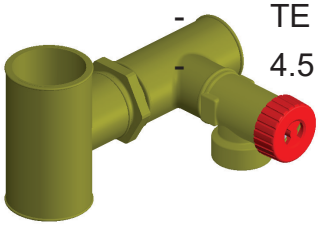

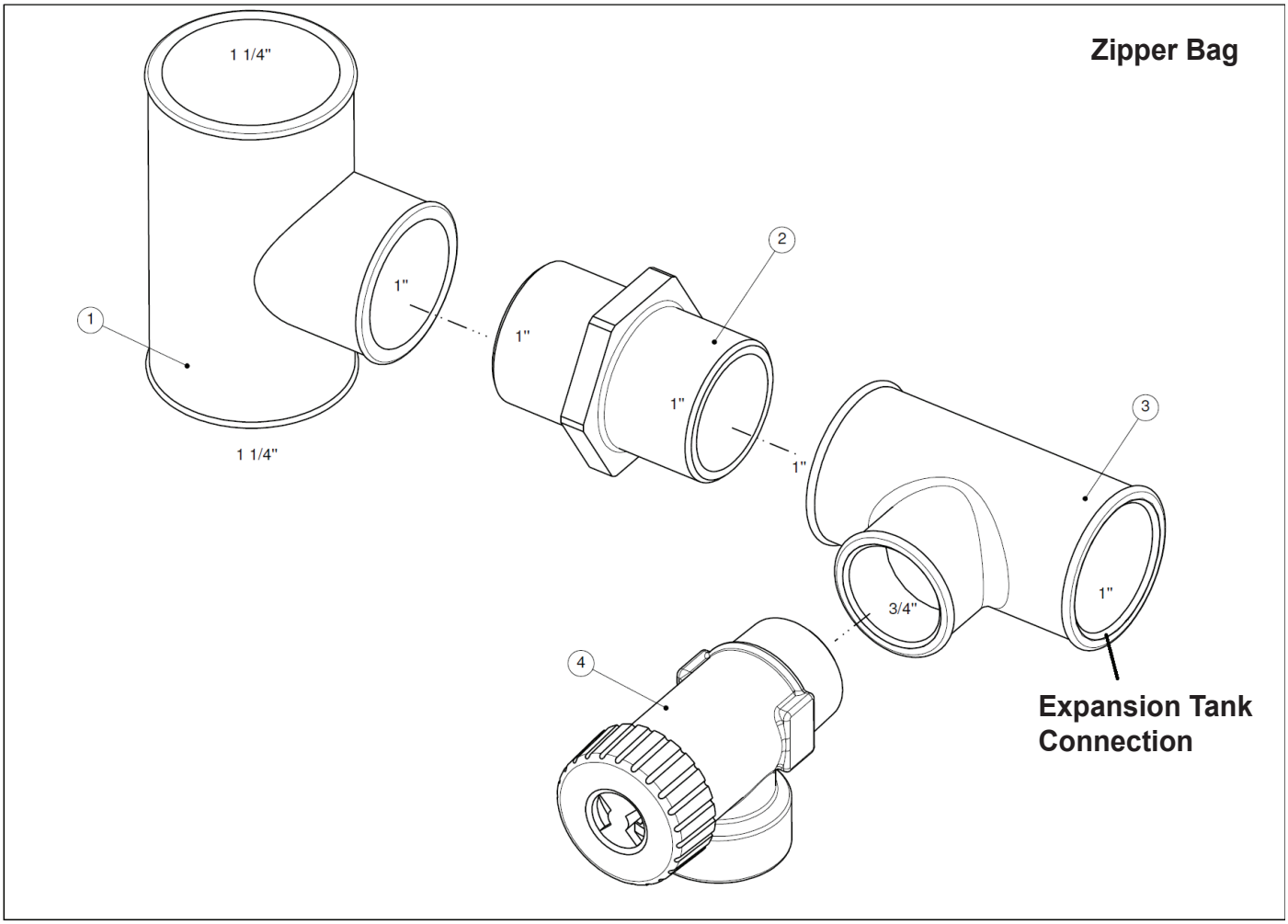

The assembly of both the assembly elements included in the packaging of your product and any other assembly accessories described in this manual should only be carried out by “authorized and trained persons”. Never allow an unauthorized person to assemble or interfere with your installation.

It is recommended to use one of the Pump and Connection Accessories Kits available through your Alarko Carrier dealer for use with your product. These additional accessories, which are shown below, are not included in the standard packaging of your appliance. In addition to the standard kit that is included in the packaging of your ALDENS Condensing Boiler, you can also supply the correct pump and connection kit externally through our authorized dealers and use it in your boiler installation.

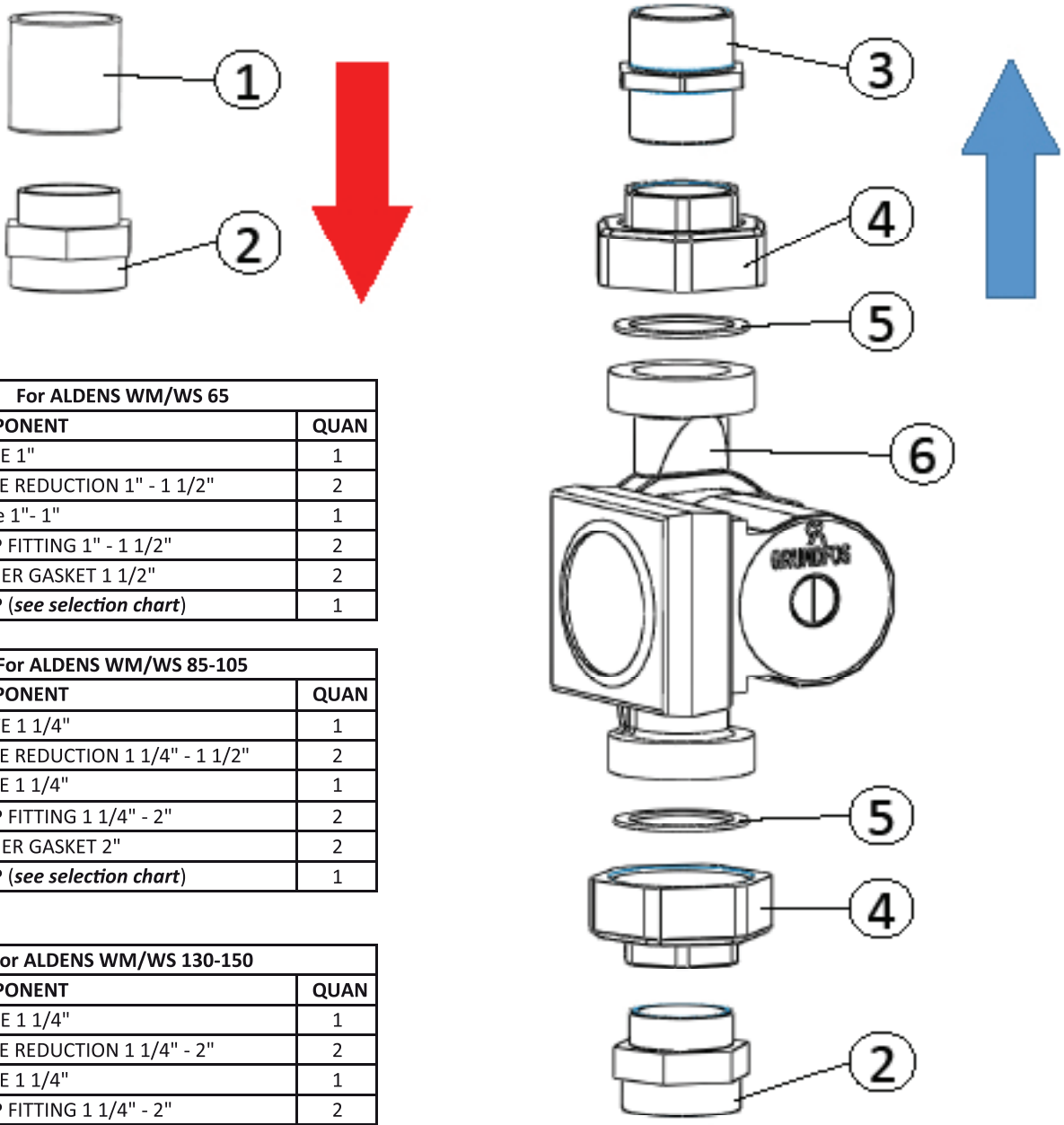

For ALDENS WM/WS 65		
NO	**COMPONENT**	**QUAN**
1	SLEEVE 1"	1
2	NIPPLE REDUCTION 1" - 1 1/2"	2
3	Nipple 1"- 1"	1
4	PUMP FITTING 1" - 1 1/2"	2
5	KLINGER GASKET 1 1/2"	2
6	PUMP (***see selection chart***)	1

For ALDENS WM/WS 85-105		
NO	**COMPONENT**	**QUAN**
1	SLEEVE 1 1/4"	1
2	NIPPLE REDUCTION 1 1/4" - 1 1/2"	2
3	NIPPLE 1 1/4"	1
4	PUMP FITTING 1 1/4" - 2"	2
5	KLINGER GASKET 2"	2
6	PUMP (***see selection chart***)	1

For ALDENS WM/WS 130-150		
NO	**COMPONENT**	**QUAN**
1	SLEEVE 1 1/4"	1
2	NIPPLE REDUCTION 1 1/4" - 2"	2
3	NIPPLE 1 1/4"	1
4	PUMP FITTING 1 1/4" - 2"	2
5	KLINGER GASKET 2"	2
6	PUMP (***see selection chart***)	1

On the side of boiler outlet water: Parts numbered 1 and 2 are used.

On the side of boiler return water (pumping line side): Parts numbered 2, 3, 4, 5, and 6 are used.

The power and control cables of the recirculation pump are included in the additional accessories kit.

- The recirculation pumps included in the additional kit and the required technical data are included in the previous section of the manual. You can use the relevant table to select the appropriate pump according to the use case.

3.1.2. Safety Warnings and Useful Information about the Exchanger, Fan, and Venturi Group

Do not disassemble or allow to be disassembled any of the front or side protection covers while your boiler is in operation. This warning is especially important for your safety. In addition, if it is detected that they are removed, your appliance will not be covered by the warranty.

During maintenance and troubleshooting, only Alarko Carrier authorized services have the authority and experience to perform this operation. Never insert any part of your body into the venturi intake port while the appliance is operating, do not insert any object through the intake port, make sure that there are no small objects (washer, nut, or any plastic part, etc.) in the appliance before closing the side and front covers of the appliance after maintenance.

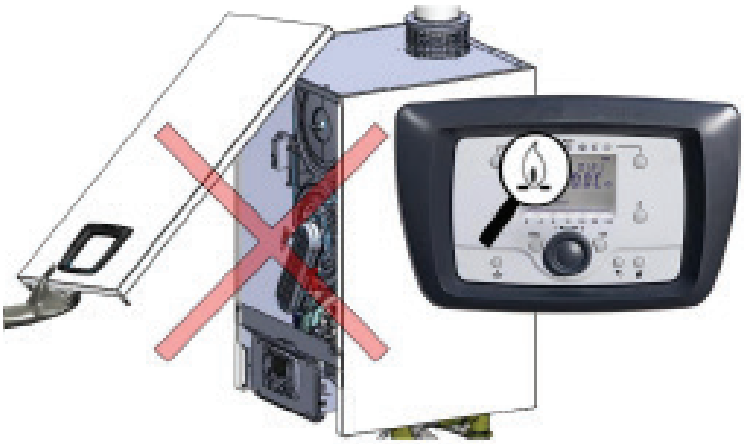

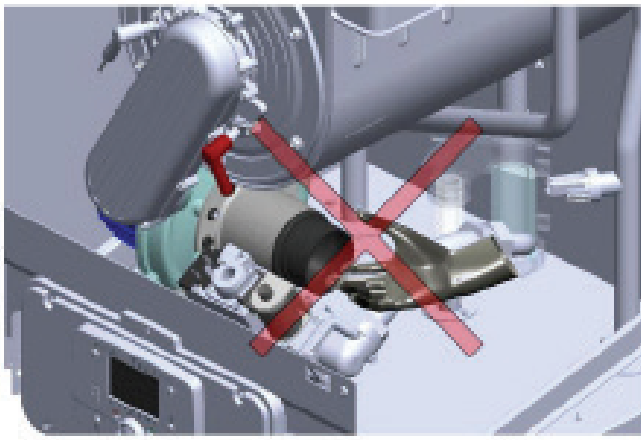

3.1.2.1. ALDENS Burner and Condensation Technology

The burner technology of your ALDENS Condensing Boiler has blue flame (Bluejet ®) technology that provides optimum and undisturbed combustion within natural gas combustion reaction limits.

- Using the flame by organizing the fluctuations in the gas pressure supplied from the natural gas line in the best way and to ensure the stability of the flame permanently
- Transferring the sensible heat of the water vapor in the waste gas passing around the coils to the primary circuit water in the best way by using the condensation technology in terms of their design superiority

are among the important features of your appliance.

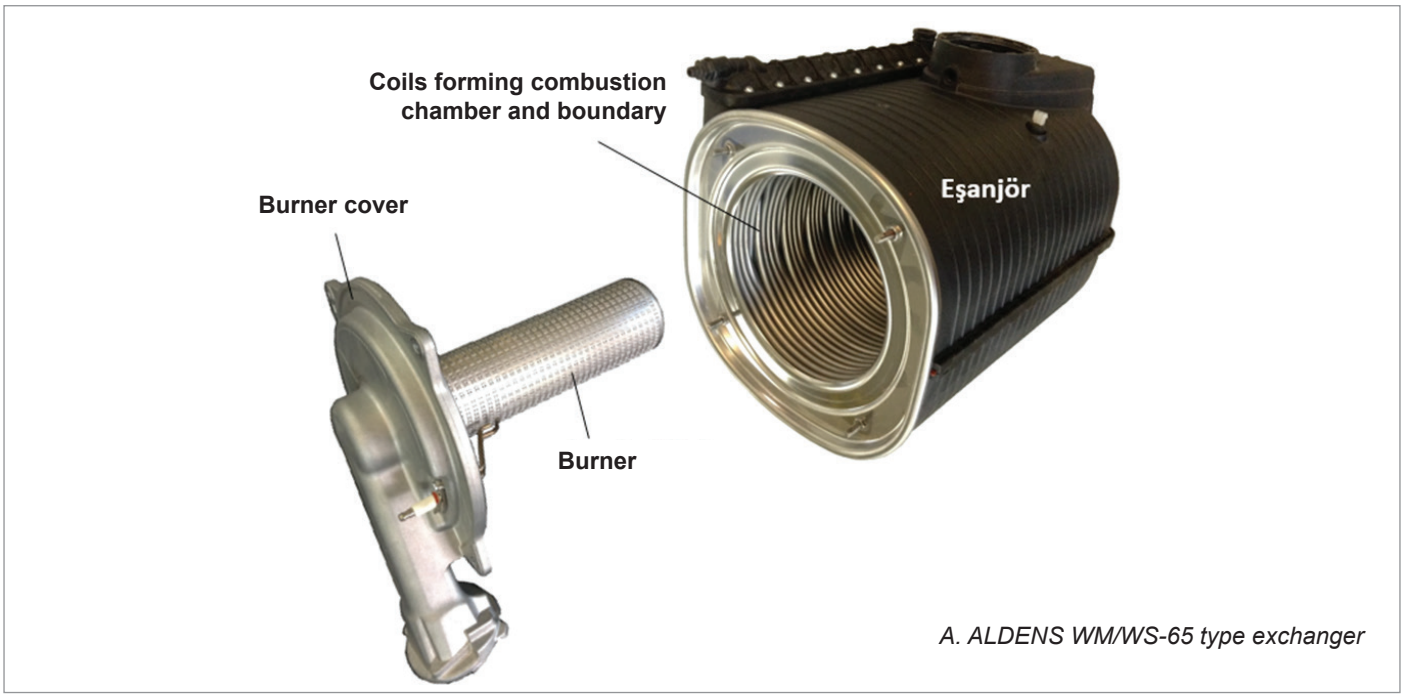

A. ALDENS WM/WS-65 type exchanger

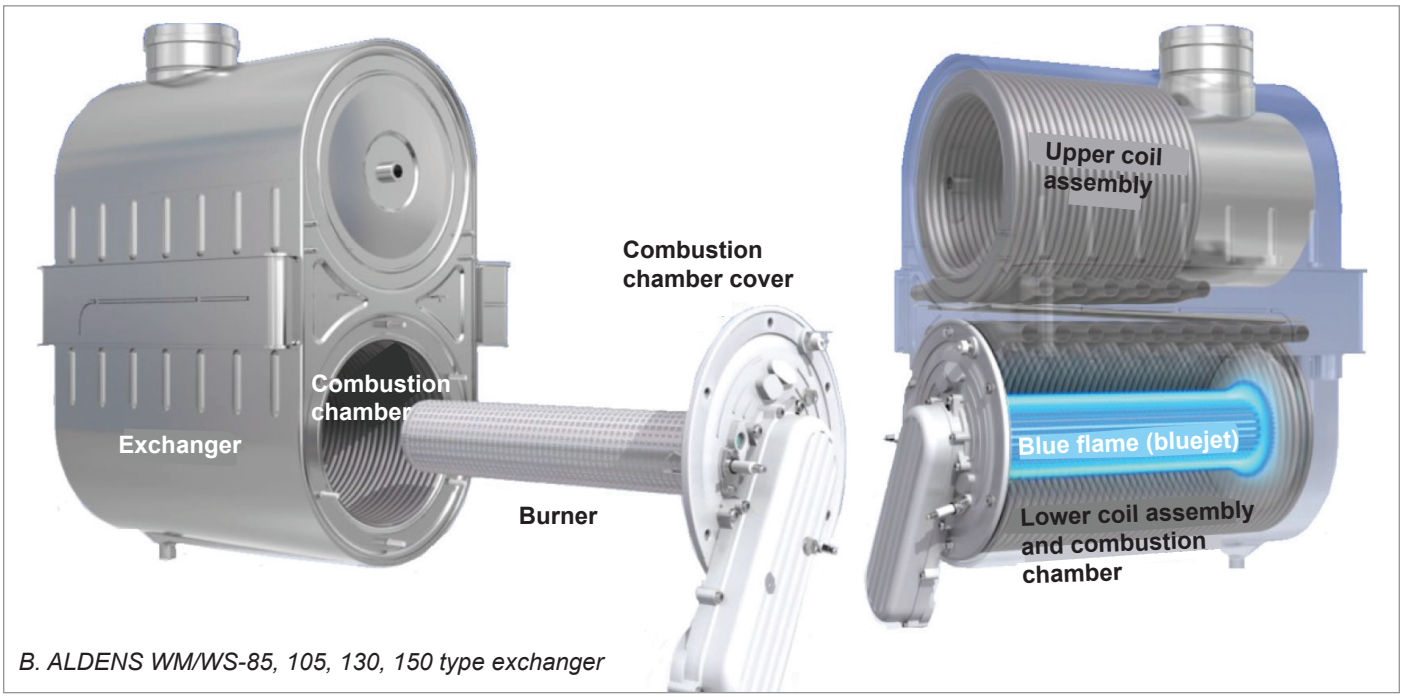

B. ALDENS WM/WS-85, 105, 130, 150 type exchanger

The periodic maintenance period of your appliance is 1 year. Every year, you need to have your boiler serviced by Alarko Carrier authorized services. One of the most important steps of boiler maintenance is the maintenance of the exchanger and the use of Sentinel brand cleaning and maintenance products is recommended for the efficient and long-lasting operation of your exchanger. The products listed below with their intended use are available from Totaline stores, an Alarko Carrier organization. (www.totaline.com.tr).

Product Usage Area	Sentinel Product	Purpose
Corrosion / calcification inhibitor	X100, X500	Preventive
Noise reduction	X200	Preventive
Cleaning	X300	Problem solver
Sludge disposal	X400	Problem solver
Antifreeze	X500	Preventive
Sealing	Sealing products	Preventive

3.1.2.2. Exchanger Carrying Assembly (Patent - PT2014/15542)

Your ALDENS Condensing Boiler has important structural advantages, and the main one is the special design heat exchanger carrying assembly. The design is patented and consists of three main carrier elements as seen below.

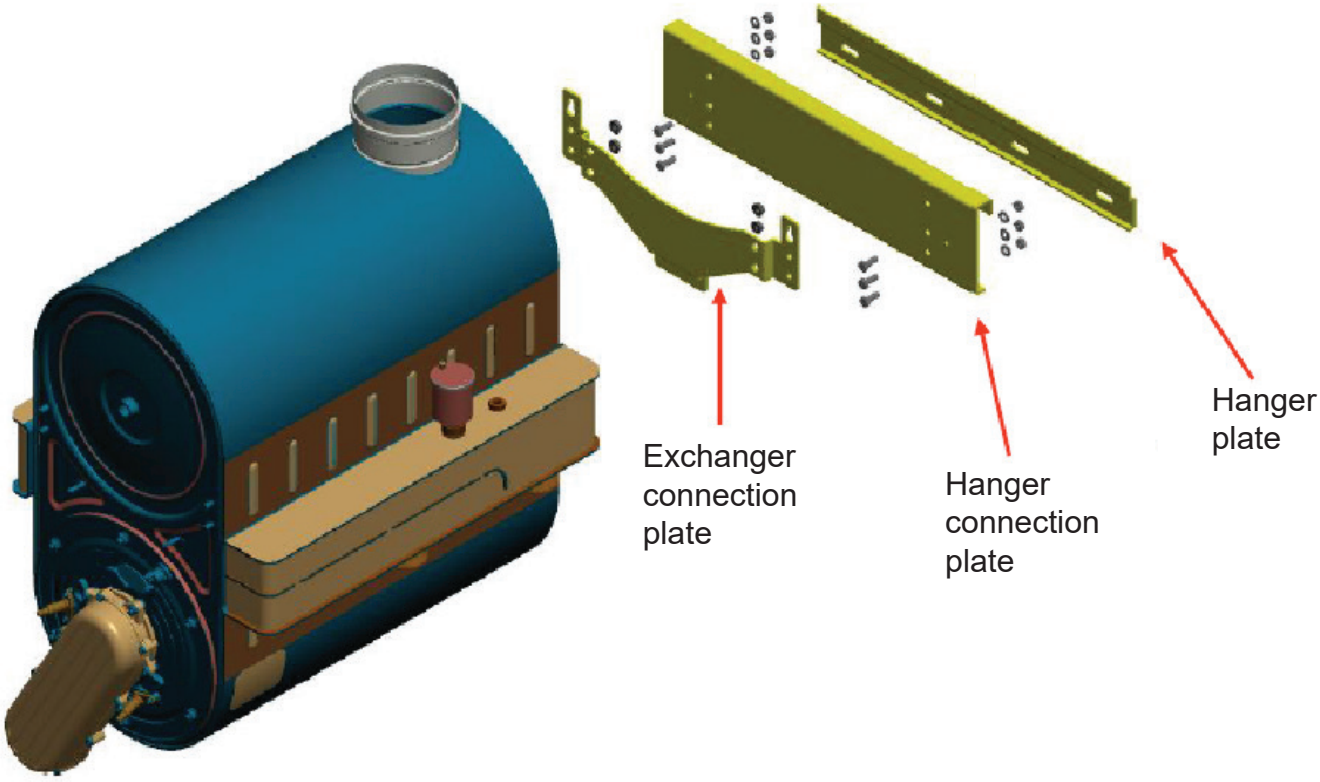

- The exchanger connection plate is directly connected to the exchanger.
- The boiler frame stands between the heat exchanger connection plate and the hanger connection plate.
- The hanger connection plate is the last part to be connected to the frame from the rear and makes the system a sandwich structure.
- Heat exchanger + heat exchanger connection plate + frame + hanger connection plate is in a single structure as a sandwich.
- The hanger plate part attached to the wall or steel hanger console is the hanger on which this entire structure is hung.
- Advanced structural engineering calculations of the whole system have been made with the maximum loaded weights and the reliability of the system has been proven several times.
- Thanks to this unique design, your appliance has an ergonomic interior design that allows for significant weight reduction and fast intervention for authorized services.

3.1.2.3. Limit Thermostat

The limit thermostat is located on the boiler outlet pipe on the ALDENS WM/WS-65 models. ALDENS WM/WS-85, 105, 130, 150 are located on the front (user side) of the exchanger.

Limit termostatın kullanım amacı, eşanjör kapak sızdırmazlığının uzun ömrünü sağlamaktır. The

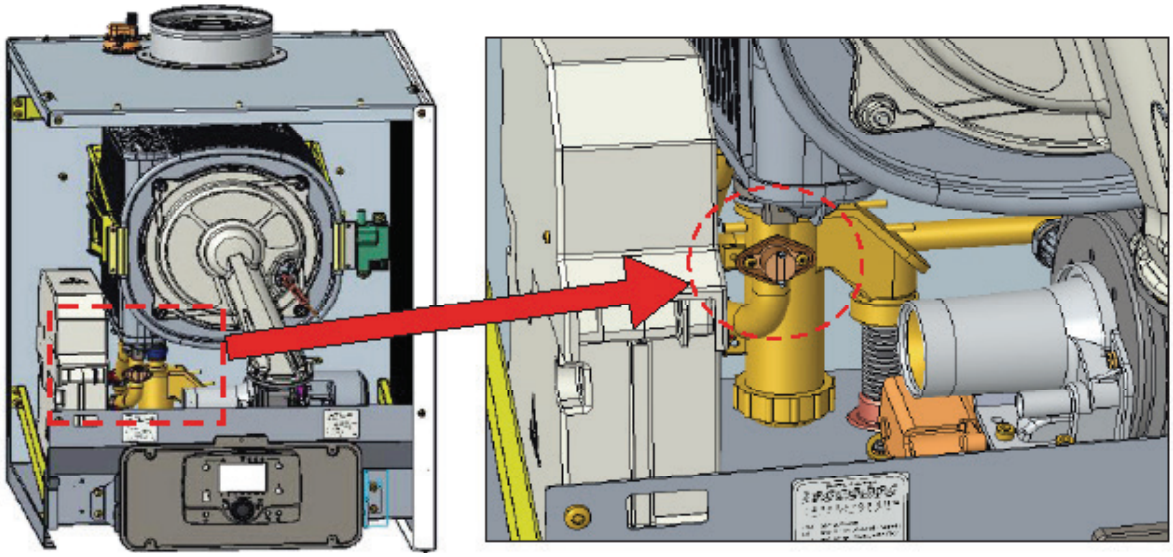

A. Limit thermostat in ALDENS WM/WS-65

purpose of the limit thermostat is to ensure a long life of the exchanger cover sealing. It is to prevent the fast aging or loss of function of the cover gaskets that act as sealing and to prevent problems arising from incorrect assembly of the cover after the reassembly of the boiler cover opened for maintenance purposes. The activation temperature is 260 ± 15°C.

The limit thermostat can be supplied as a spare part through Alarko Carrier authorized dealers. If there is no fault according to the decision of the authorized service, it can be reset and continued to be used. If the limit thermostat trips, call your Alarko Carrier authorized service for troubleshooting and maintenance.

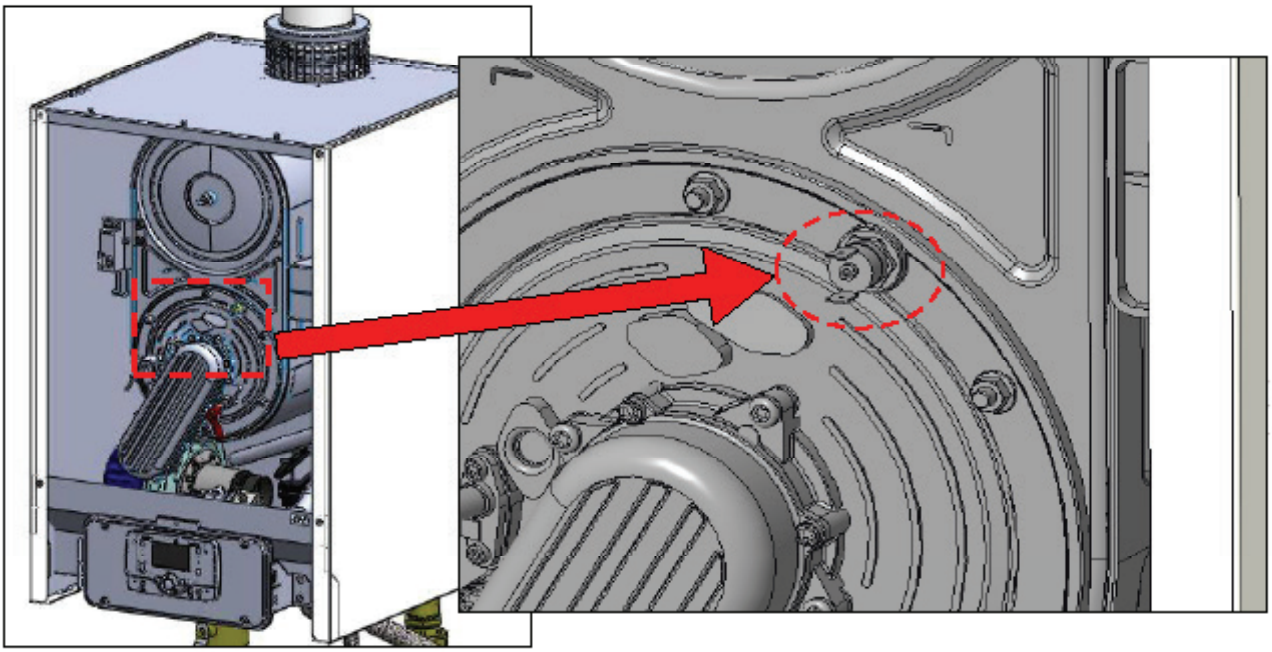

B. Limit thermostat in ALDENS WM/WS-85, 105, 130, 150

3.1.2.4. Thermal Fuse

The other thermostat component on the exchanger serves as a thermal fuse and cannot be reused and must be replaced if it trips once. The purpose of use is to ensure that the combustion chamber is sealed and to prevent damage due to high temperature. It is activated at 318°C. In case the thermal fuse trips, you should contact Alarko Carrier authorized services. Thermal fuse is also available as a spare part through our authorized dealers.

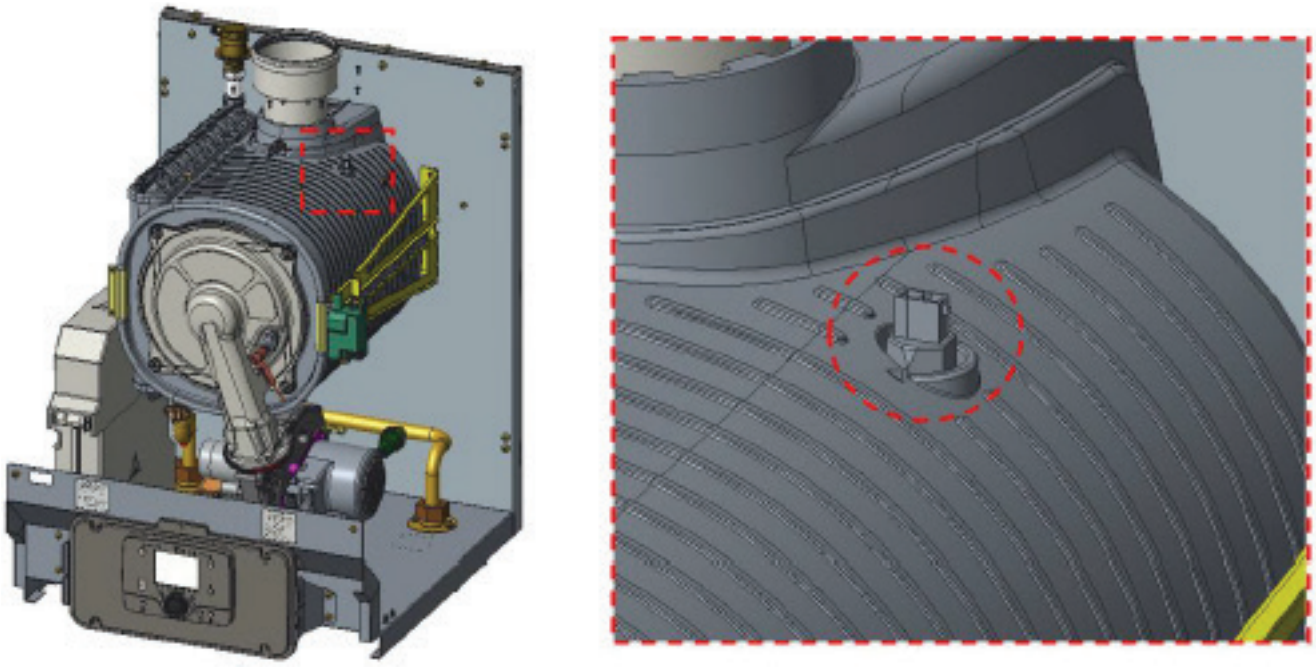

A. Thermal fuse in ALDENS WM/WS-65

The thermal fuse is located on the upper surface of the exchanger on the ALDENS WM/WS-65 models and behind the exchanger on the ALDENS WM/WS-85, 105, 130, 150 models. It is not possible to access the thermal fuse manually on the ALDENS WM/WS-85, 105, 130, 150 models. Therefore, if the thermal fuse trips, the exchanger, in other words the boiler, must be removed.

If deemed necessary following the inspection of the authorized service, the appliance can be taken out of the area where it is used for maintenance or taken into workshop maintenance. Only Alarko Carrier authorized services have the necessary authority and knowledge on how to disassemble the exchanger for thermal fuse replacement or other reasons.

In the event of an unauthorized intervention, your appliance will be out of warranty. For this reason please contact our authorized services via www.alarko-carrier.com.tr page.

Only Alarko Carrier authorized service partners have the necessary knowledge, experience, and authority to assemble or disassemble the exchanger.

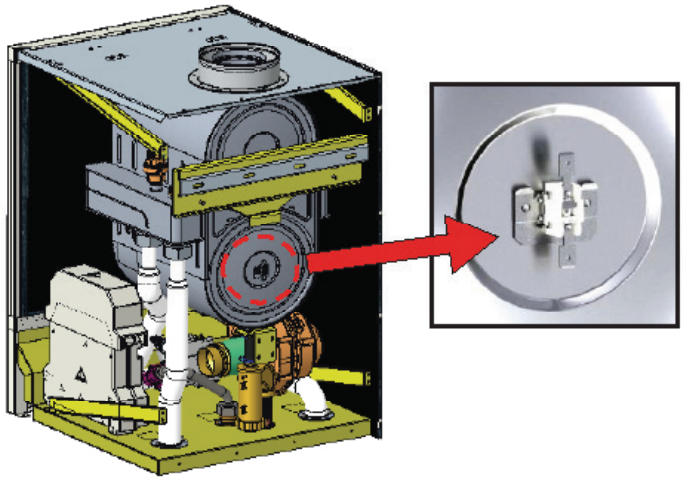

B. Thermal fuse in ALDENS WM/WS-85, 105, 130, 150

3.2. Unpacking the Appliance

The cardboard material used in the packaging of your product is made entirely of recyclable material.

It is recommended that the packaging be opened right before the product assembly. **Alarko Carrier is not responsible for the negative consequences of storing the product under incorrect conditions.**

Materials used in packaging (plastic bags/nylon, foam/polystyrene, nails, screws, staples, etc.) should not be kept within reach of children.

Your ALDENS Condensing Boiler is fixed on a wooden pallet as shown below.

At the time of unpacking, ALDENS WM/WS-65, 85, 105, 130, 150 (leading or follower) boilers have

– net - masses of approximately 55, 69, 69, 75, and 89 kilograms, respectively. Never lift alone! Ask at least 1 more person if possible for help with the following actions. It is recommended to use a vehicle like a lift to hang the boiler on the wall. Follow the sequence below for opening the package and then lifting the boiler.

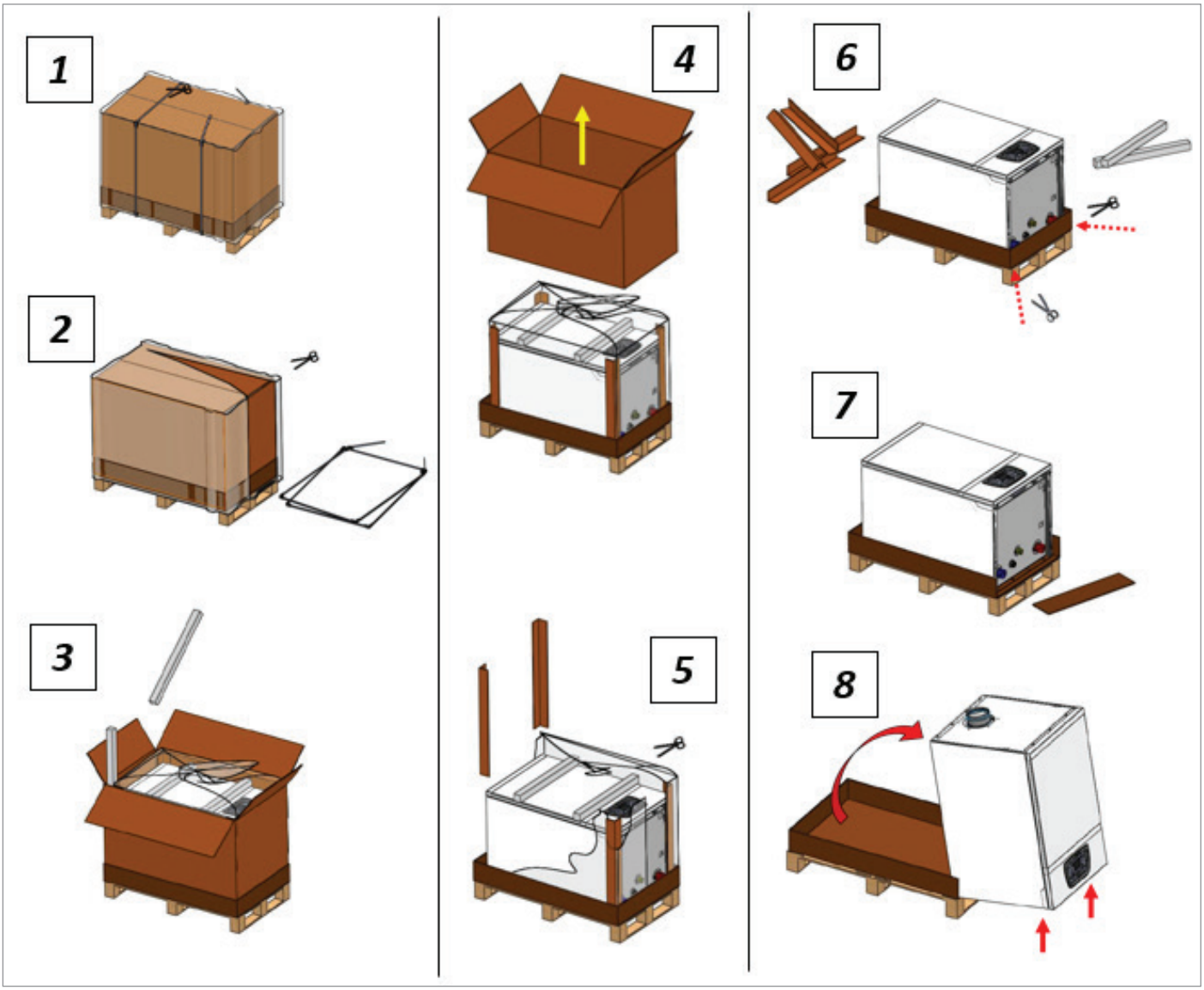

In the final stage, carefully lift the boiler up in the air by rotating it on the bottom and wall sides. Before this, do not forget to put support along the front edge and in a way that it will be inside the lower and front edge.

3.3. Issues to Take into Account for the Wall Mounting of the Boiler and the Carrier System

Before the assembly of your product on the wall, the wall hanger part must be securely attached to a structurally robust wall or a carrier system that meets the requirements (e.g. a steel carcass construction). The hanger part located on the back (facing the wall) of the boiler and whose end is bent towards the ground shall be hung on the wall hanger part to be fixed to the wall with a lag screw and dowel pair. It is recommended that you consult an expert/engineer about the strength and structural capabilities of the wall where the lag screw anchorage is made.

Using a lifting machine could be useful if you know how to use it to lift your ALDENS Condensing Boiler to hang it on the wall hanger, and if you use it correctly.

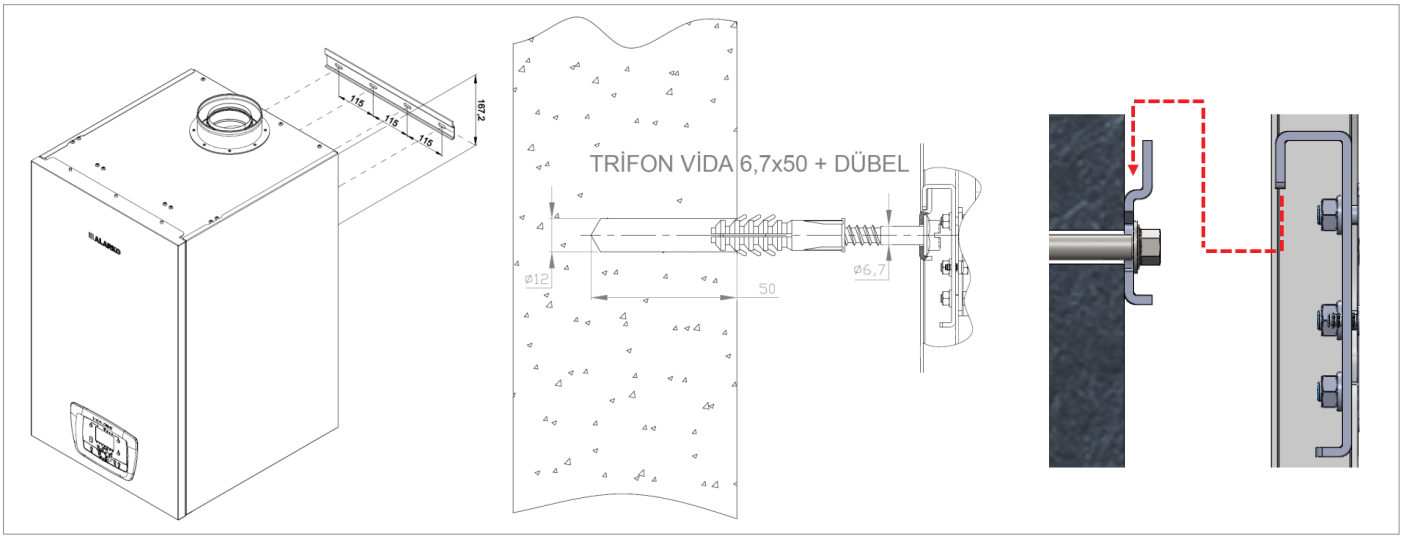

Use the 4 screw-dowel sets from the appliance package to fix the hanger part to be mounted on the wall. It may be useful to apply a chemical-based and delayed liquid mortar into the slot where the dowel will be placed on the wall.

The position of the hole centers of the hanger part in relation to the boiler is as seen above. In addition, you can check the previous section of the manual (Section 3.1.2.2) again to get information about the internal structure of the hanger system and its connection to the boiler.

3.4. Basic Electrical Diagram and External Connections

The following values should be taken into consideration for the cross-sectional areas of the cables used in the system and the maximum length value of these cables. This information is for sensor cables.

The next page contains the electrical diagram of the ALDENS WM/WS-65 appliances and the next page contains the common electrical diagram of the ALDENS WM/WS-85, 105, 130, and 150 boilers.

Only Alarko Carrier authorized services can intervene in the electrical connections of your boiler. Other interventions will cause your boiler to be out of warranty.

Section Area	Maximum Length
0.25 mm²	20m
0.5 mm²	40m
1 mm²	80m
1.5 mm²	120m

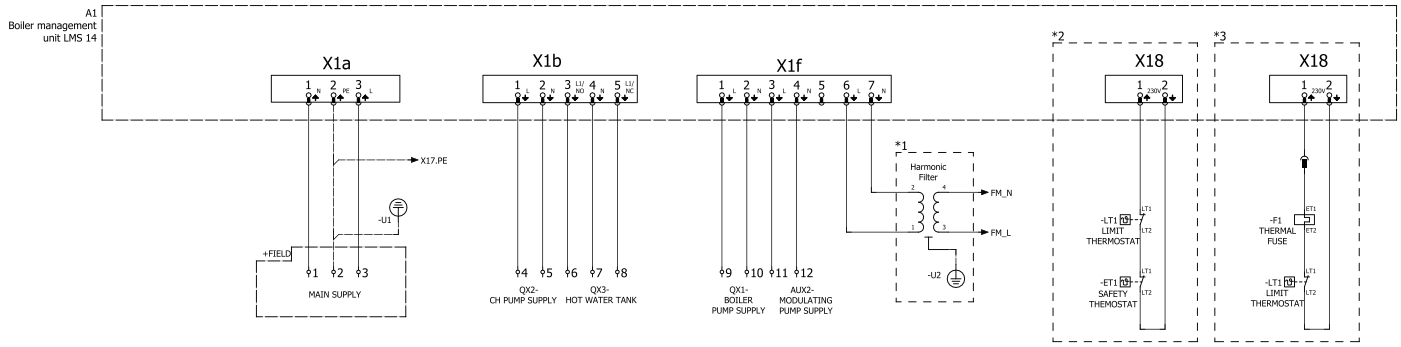

NOTE :
*1 - IN ALDENS 150 DEVICES, HARMONIC FILTER IS USED.
*2 - IN ALDENS 065 DEVICES, THE CONNECTION FOR X18.
*3 - IN ALDENS 085-105-130-150 DEVICES, THE CONNECTION FOR X18.

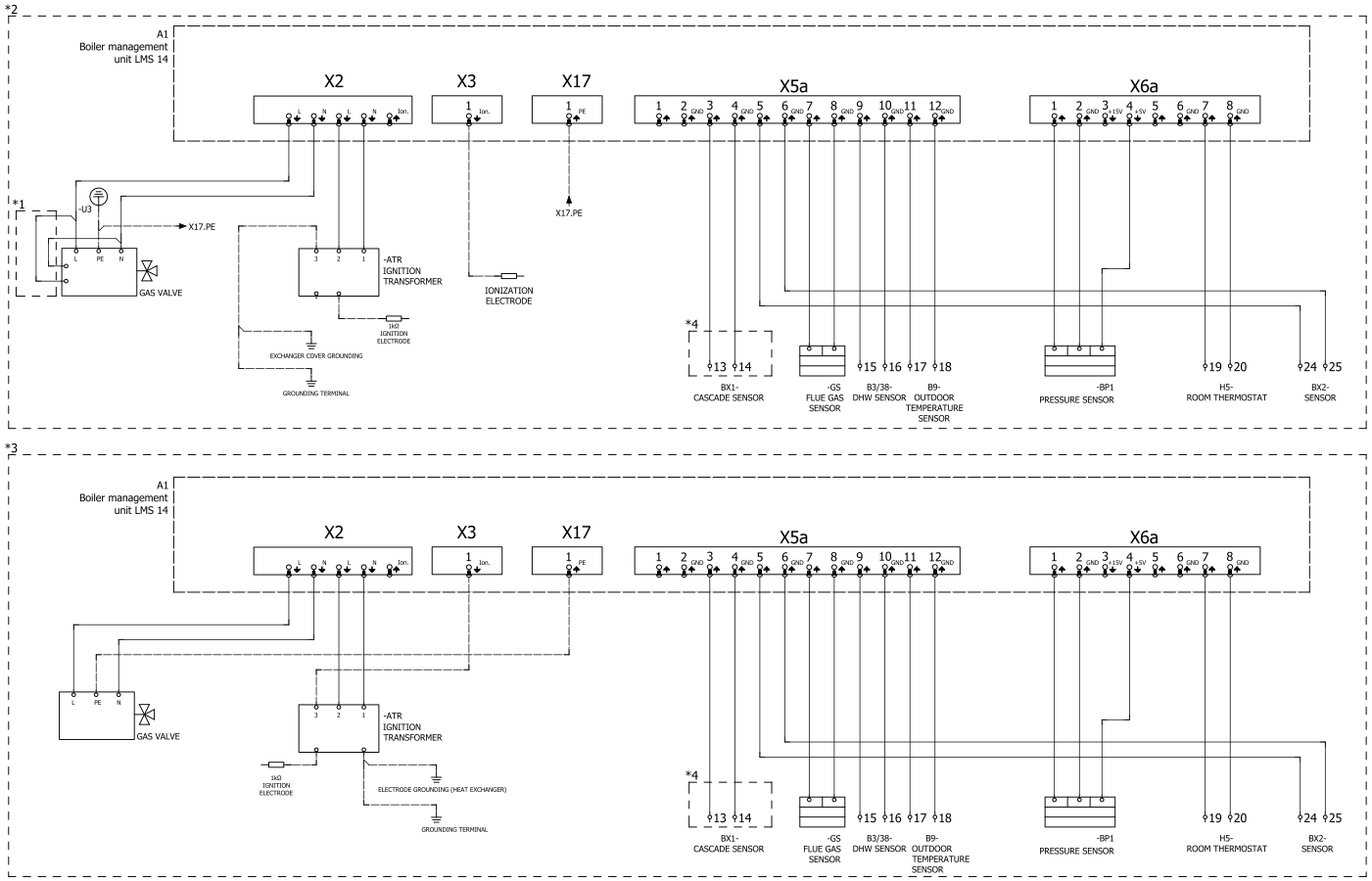

NOTE :
*1 - IT IS THE CONNECTION TO BE ADDED IN ALDENS 105-130-150 DEVICES.
*2 - IT IS THE X2-X3-X17 CONNECTION IN ALDENS 085-105-130-150 DEVICES.
*3 - IT IS THE X2-X3-X17 CONNECTION IN ALDENS 065 DEVICES.
*4 - CASCADE SENSOR WILL BE USED WHEN A CASCADE SYSTEM WILL BE APPLIED.

ALDENS WM/WS / 65, 85, 105, 130, 150 Electrical Diagram

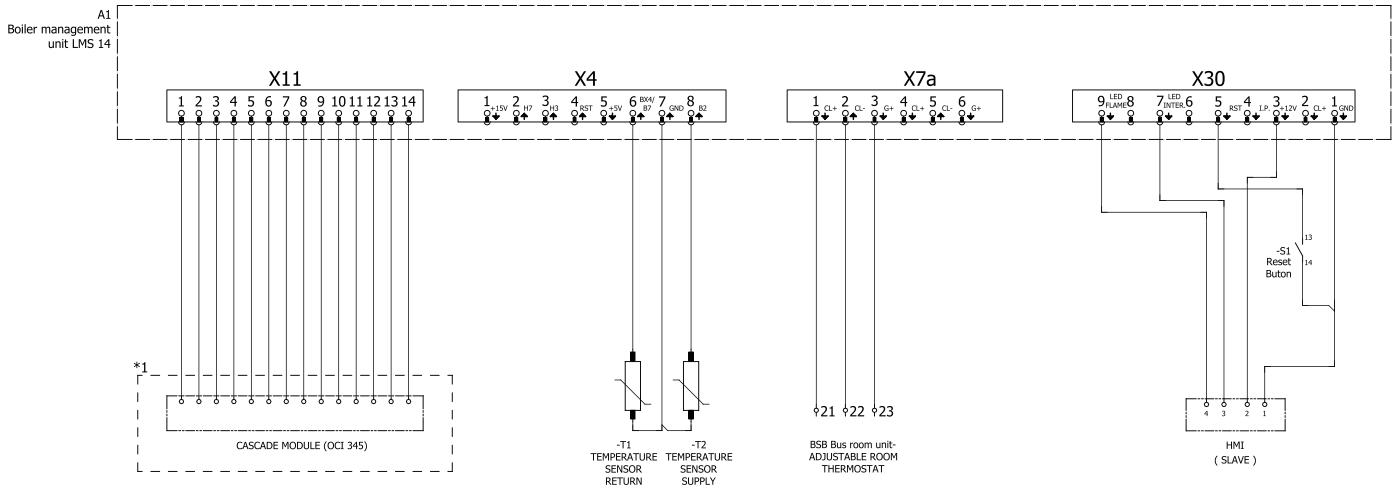

NOTE :
*1 - CASCADE MODULE IS NOT USED IN MASTER DEVICES. (SLAVE DEVICES CAN BE CASCADED)

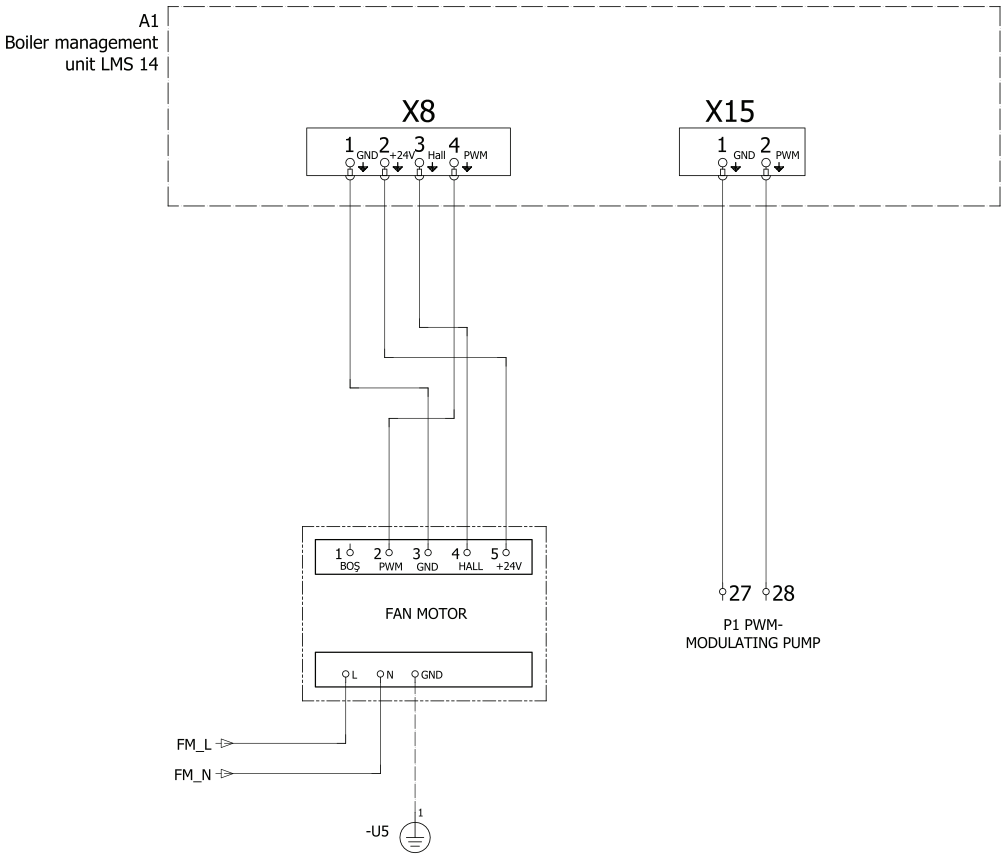

ALDENS WM/WS / 65, 85, 105, 130, 150 Electrical Diagram

If a three-way valve or boiler is used, the system circuit diagram and the electrical connections to control this system should be installed as shown in the example below. The example will also give an idea of the connection of your ALDENS Condensing Boiler with a boiler or similar hot water tank to supply domestic water other than its standard use with the heating circuit.

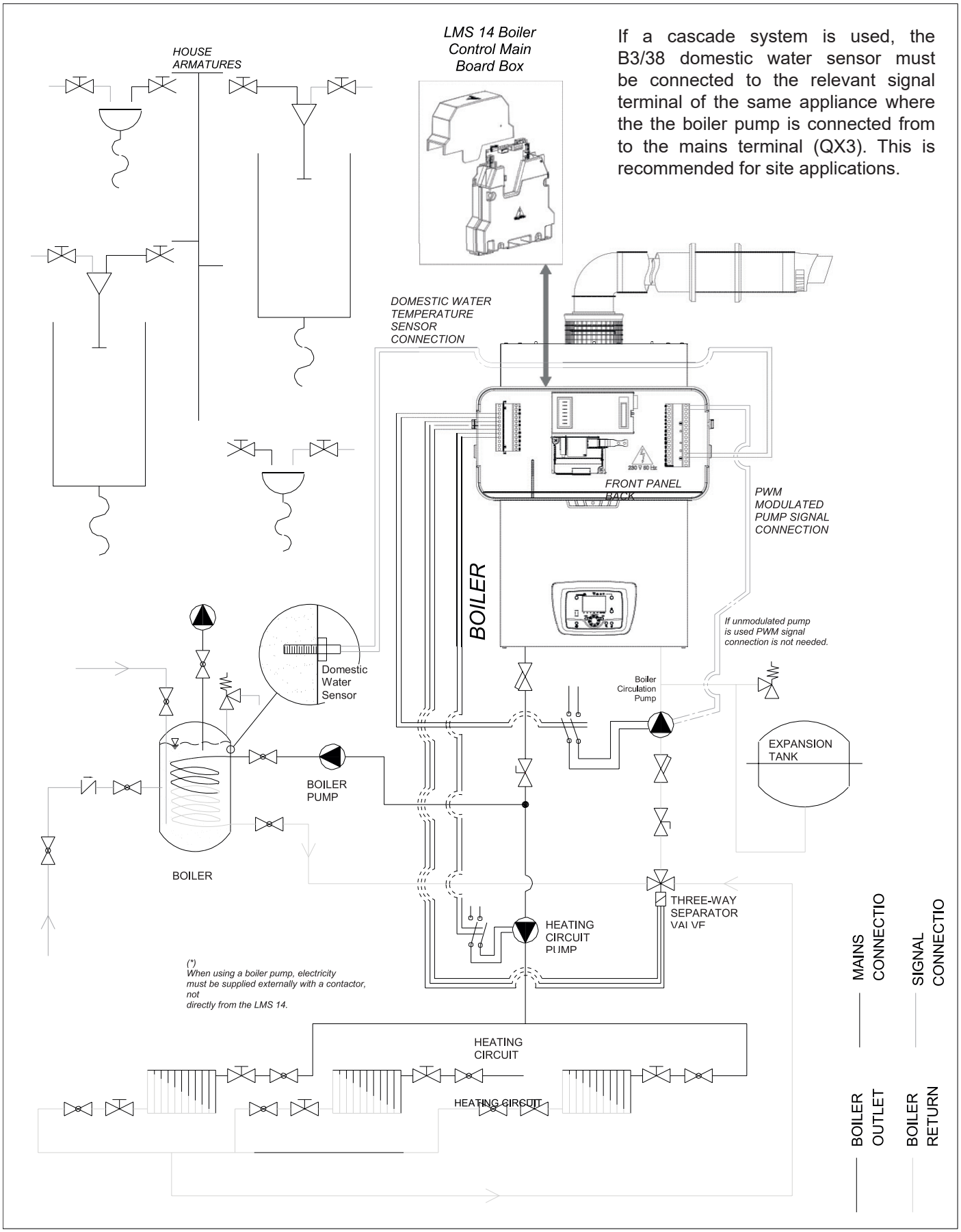

Short Information about Sensors to be Used in the System

In order to transfer the temperature of the balance container used to the boiler control electronic board, wet type (immersion) sensors should be used primarily, but clamp type temperature sensors that can be mounted on the pipe can also be used.

QAZ36.522/109 NTC 10 kΩ

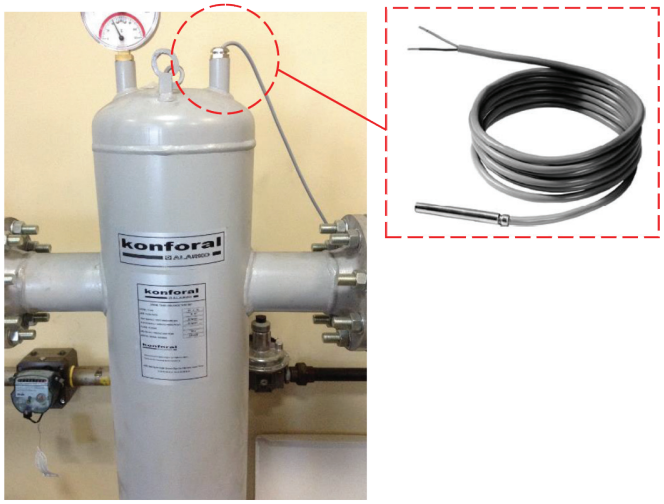

- Balance container sensor that should be used in your system is QAZ36.522/109 NTC 10 kΩ (0 / +95°C). If the sensor cable of the balance container is not sufficient, the second alternative is the QAZ36.526/109, which is 6m long.
- The solar energy sensor that you should use in your system to monitor the temperature in the storage of the energy gained by solar energy in a storage tank can be the same as the balance container sensor, but where exposure to highly variable temperatures is possible (e.g. up to 200°C maximum), using QAZ 36.481/101 NTC 10kΩ (-30 / +200°C) is recommended.
- If there is another sensor you want to use, you can see the table below.

Usage Area	Type	Sensor name	Sensor type	Measurement Range	Tolerance	Time Constant	Cable Length	Appearance
Solar Collector	**Immersion**	QAZ36.481/101	NTC 10 kΩ - 25 °C	-30 / 200 °C	± 0,5 °C	30 s	1500 mm	
Balance Container or Boiler	**Immersion**	QAZ36.522/109	NTC 10 kΩ - 25 °C	0 / 95 °C	± 0,5 °C	30 s	2000 mm	
3-way Blend Valve or Exchanger with Primary-Secondary Circuit Separator Plate	**Clamp**	QAD36/101	NTC 10 kΩ - 25 °C	-30 / 125 °C	± 0,5 °C	6 s	4000 mm	
Outside Air Sensor	-	QAC 34/101	NTC 1 kΩ – 25 °C	-50 / 70 °C	± 1 °C	12 dk	Maximum allowed 120 m	

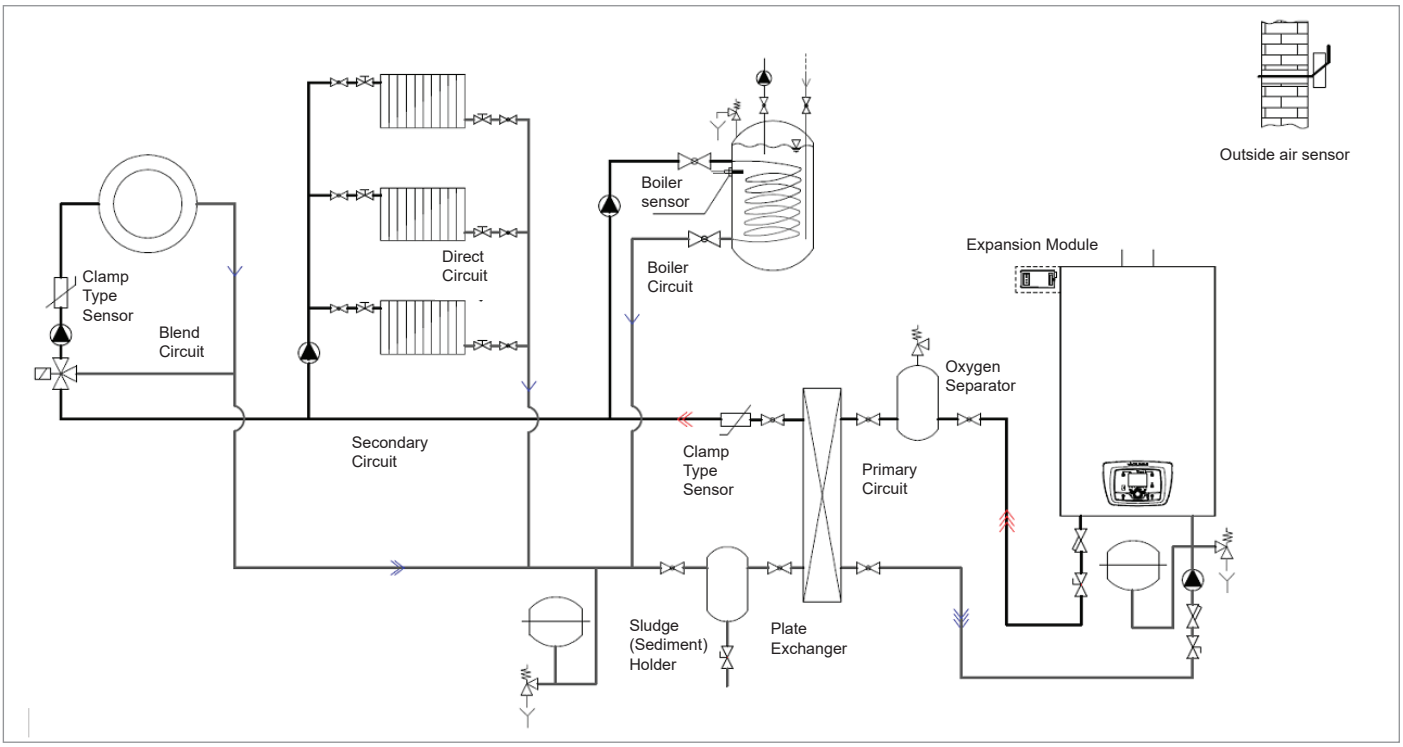

The clamp type sensor (QAD36/101) is used when a plate exchanger is used to separate the primary and secondary circuit, or when a 3-way valve is used for a blend circuit. The balance container sensor, boiler sensor, or solar collector sensor are immersion type sensors and a shell in which they are to be placed (immersed) is required where they will be used.

Use of Room Thermostat

It is possible to place three room thermostats in your installed system, whether it is a singular or cascade system. Room thermostat can be placed in each of the 3 different zones. In other words, the boiler main board (LMS14) can be connected to three room thermostats. In this case, three different locations can transmit their heat demands to the main board digitally (on/off). Room thermostat connections can be made to H4, H5, or H6, which are digital inputs of LMS14.

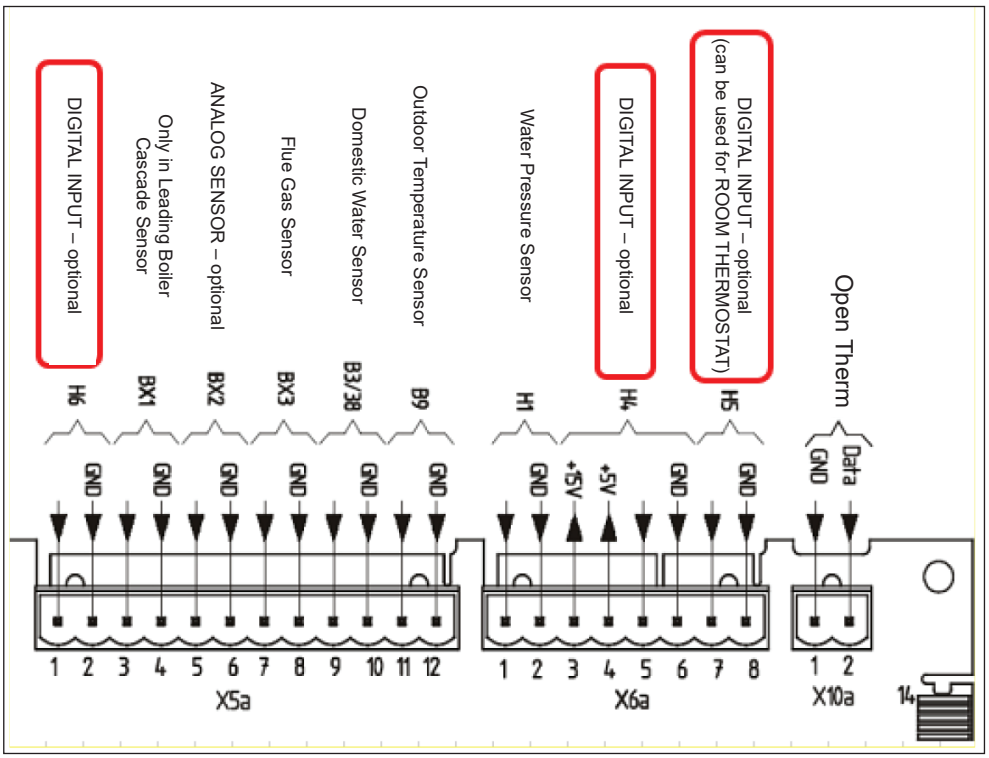

Use of Indoor Room Unit

Alternatively, 2 indoor room units can be placed and two independent direct circuits can transmit their own heat demands to the system. LMS14 can be connected with maximum of 2 indoor room units.

If the indoor unit is used, the cable ends of the appliance should be connected to the contacts named CL+ and CL-. The relevant contact information can also be found in the LMS14 boiler main board terminal diagram. You may notice that it is located in terminals X7a and X30 for quick information. CL+ is BSB data connection, CL- is BSB ground connection. These connections will be used with the indoor room unit.

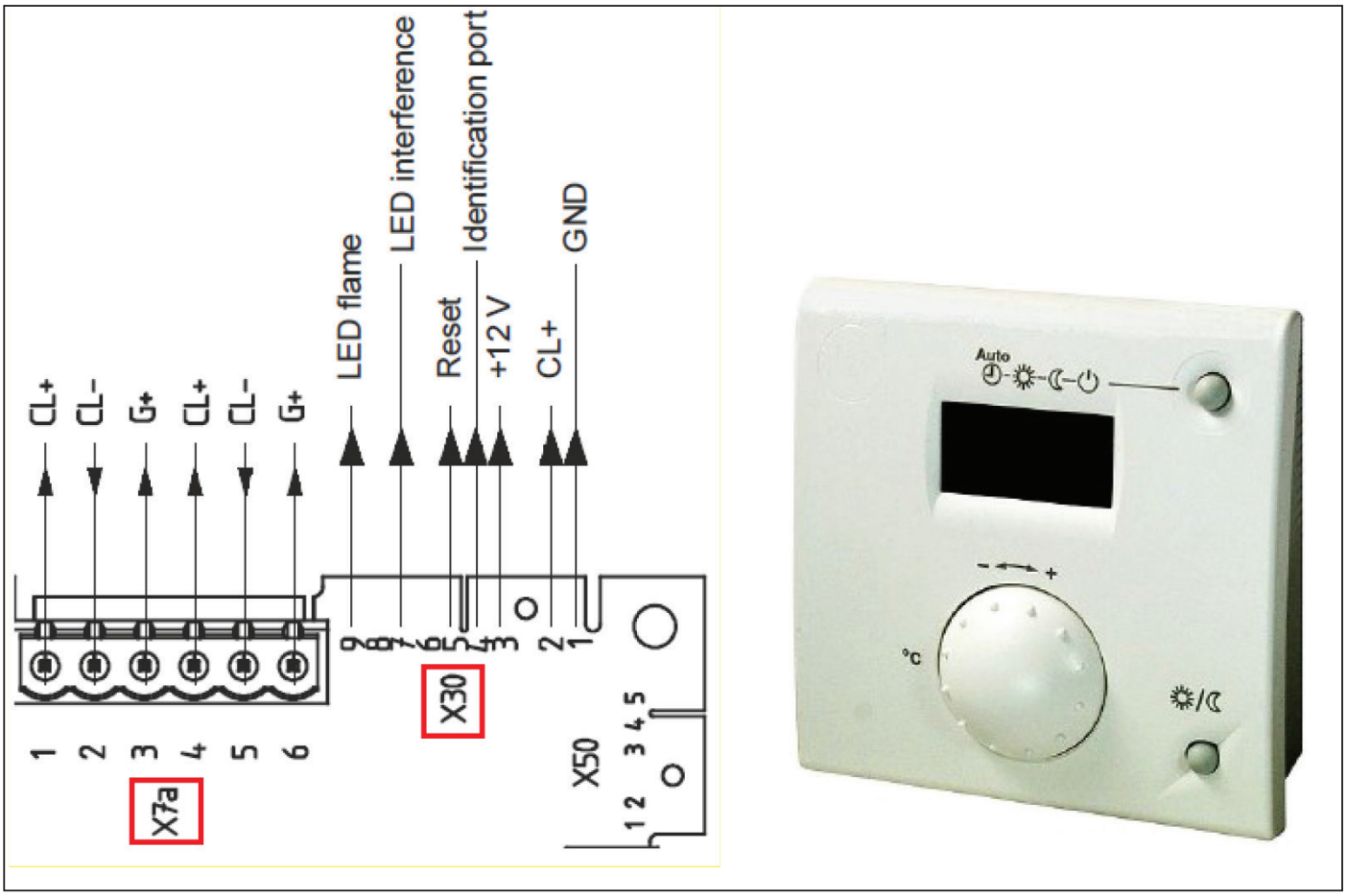

3.5. Flue Types and Elements

Flue gases of boilers over 50 kW are forbidden to be released from the side walls or windows of the building. For this reason, the following figure does not show that waste gas of any type of flue connection is transferred through the side wall.

It should be noted that condensing appliance flue pipes cannot be used in conventional appliances and conventional appliance flue pipes cannot be used in condensing appliances.

3.5.1. Standard Flue Illustrations

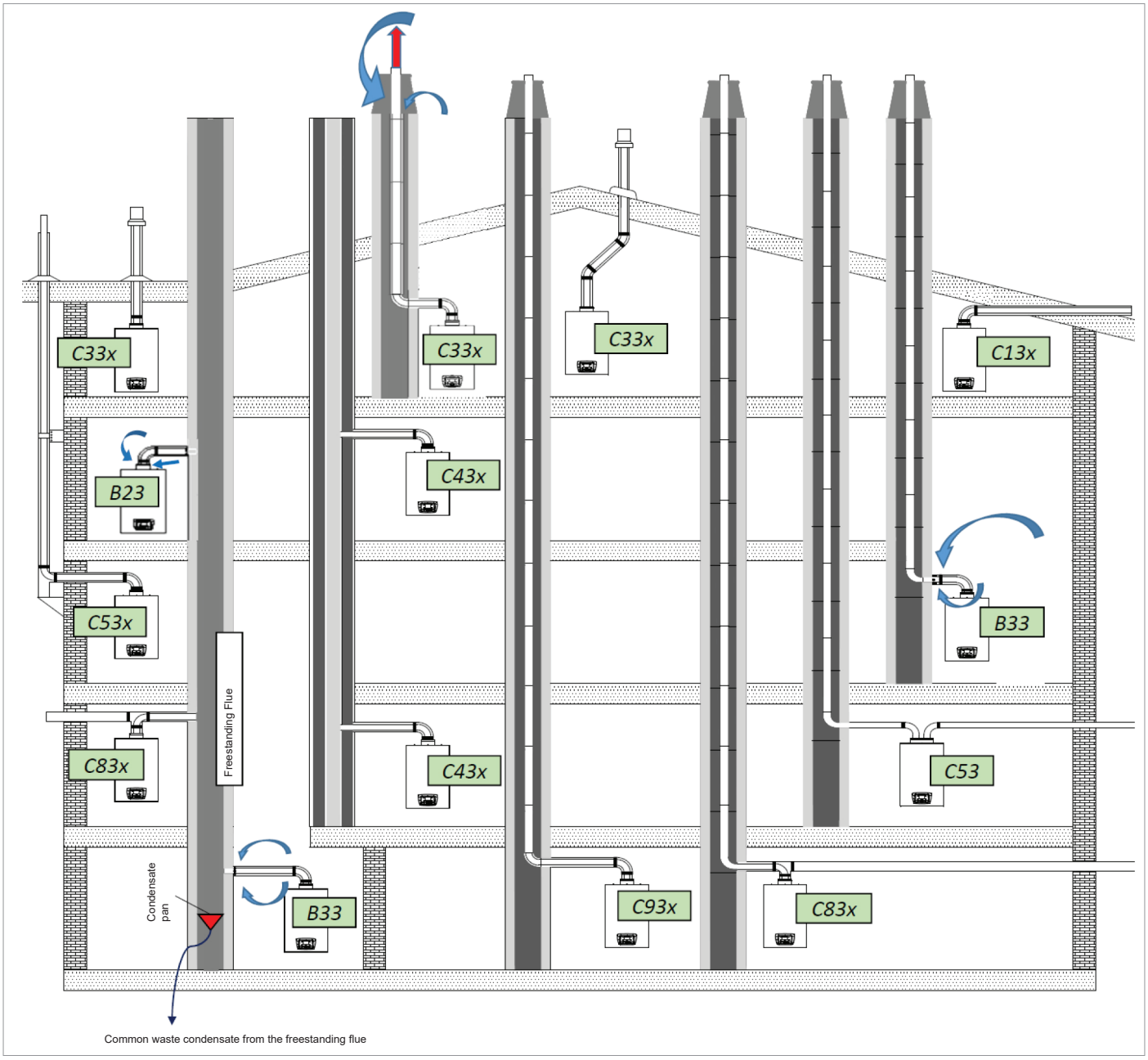

The condensate in the flue pipes should be flushed into the drain using the flue siphon. There must be a condensate pan in the freestanding flue, the condensate formed in the flue must not be transferred to the boiler or boiler flue connection pipes.

The flue types shown above are also described in Section 2 and are standard flue types in general use. Many applications are possible from the free suction of air from a ventilation shaft to both air intake and exhaust with a coaxial flue system in that shaft, to direct exhaust into the shaft with a split line while fresh air is sucked in by the building facade or to indirect exhaust where it passes through and reaches the roof, to direct exhaust and fresh air intake from the roof. Depending on the location or construction conditions where the commissioning will be made, you can project the air intake and exhaust installation of your cascade condensing boiler system or make a preliminary design with the flues described in this section, both with the existing types and with the standard flue kit equipment you can find below, or you can easily convey your requirements when you contact Alarko Carrier authorized dealers.

Standard Flue Types and Descriptions

Flue Type	Description
B23	Waste gas pipe through the flue, fresh air from the room directly through the appliance (open type)
B23	Dual cascade waste gas pipe through the flue, fresh air from the room directly through the appliance (open type)
B33	Waste gas pipe through the flue, fresh air from the room, horizontal concentric connection (open type)
B33	Horizontal concentric pipe connection to condensation resistant flue, fresh air from the room (open type)
C13x	Horizontal concentric roof transition application for sloping roof (hermetic type)
C33x	Vertical concentric roof transition from sloping or flat roof (hermetic type)
C43x	Connection to condensation-resistant fresh air/waste gas flue shaft, from appliance elbow center to flue connection maximum horizontal pipe length 2 m. (hermetic type)
C53	Waste gas pipe through the flue, fresh air from outside (hermetic type)
C53x	Discharge from the roof by passing the waste gas pipe through the exterior (hermetic type)
C83x	Waste gas pipe through the flue, fresh air from outside (hermetic type)
C83x	Concentric connection to condensation-resistant flue, fresh air from outside (hermetic type)
C93x	Waste gas pipe through the flue, fresh air pipe through flue shaft, horizontal concentric connection (hermetic type)

In order to transfer the condensate formed in the flue pipes to the drain, the waste gas pipes should be installed in the flue with an upward slope. If a cascade system is used, the assembled version of the system is given in Section 2.4. The waste gas collectors should be installed with an upward slope. This is essential in order to dispose of the condensate. The bottom end of the collector must have a condensate siphon.

Similarly, in flue applications where the fresh air suction pipe is directly opened to the open air, the pipe end should be installed with a downward slope (to prevent rain water from entering). Slopes should be 3 degrees.

Collector Information Required in the Use of Cascade System

The waste gas and flue installation information you will need to design and commission your own flue installation is included in the Technical Specifications Table in Section 2.2 at the beginning of the manual.

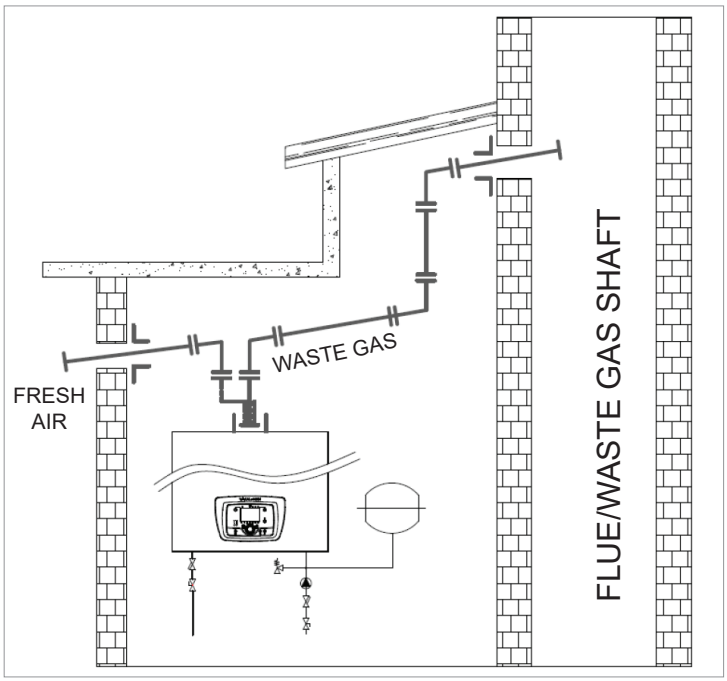

Maximum Flue Lengths for Single Boiler (Horizontal +1xElbow+Vertical Total)

Maximum Flue Length (m)						
Thermal Power (kW)	Type B Φ 80	Type B Φ 100 (Exhaust or Twin Line Only)	Type B Φ 130	Type B Φ 150	Type B Φ 200	Φ 100/150 Concentric
65	**17**	**77**	**325**	**>325**	**>325**	**26**
85	**7**	**75**	**317**	**>317**	**>317**	**25,1**
105	**3**	**52**	**226**	**>226**	**>226**	**17,5**
130	**3**	**32**	**151**	**>151**	**>151**	**11,2**
150	**1**	**26**	**125**	**>125**	**>125**	**9,0**

Elbow equivalent lengths can be read from the table below.

Elbow Equivalent Lengths (m)					
Tip	**Φ 100**	**Φ 130**	**Φ 150**	**Φ 200**	**Concentric Φ 100/150**
	L_{eq}	L_{eq}	L_{eq}	L_{eq}	L_{eq}
45º	2,3	1,8	1,7	3,7	1,3
90º	3,7	4,4	4,0	5,7	2,2

The flue quantities shared in this section are calculated for positive pressure systems. Cascade flues should be designed and constructed by having them calculated by Gazmer approved authorized flue companies depending on the flue diameter, length, and type, and the number of boilers to be used.

3.5.2. About the Flue Installation Design

Below are some examples created with schematic symbols so that the waste gas and fresh air requirements of your ALDENS Condensing Boiler can be installed in accordance with the construction structure of your location.

For example, below is a cascade system flue circuit diagram consisting of two back-to-back stations and a total of 4 condensing boilers, which is one of the numerous examples that can be created with basic waste gas installation elements.

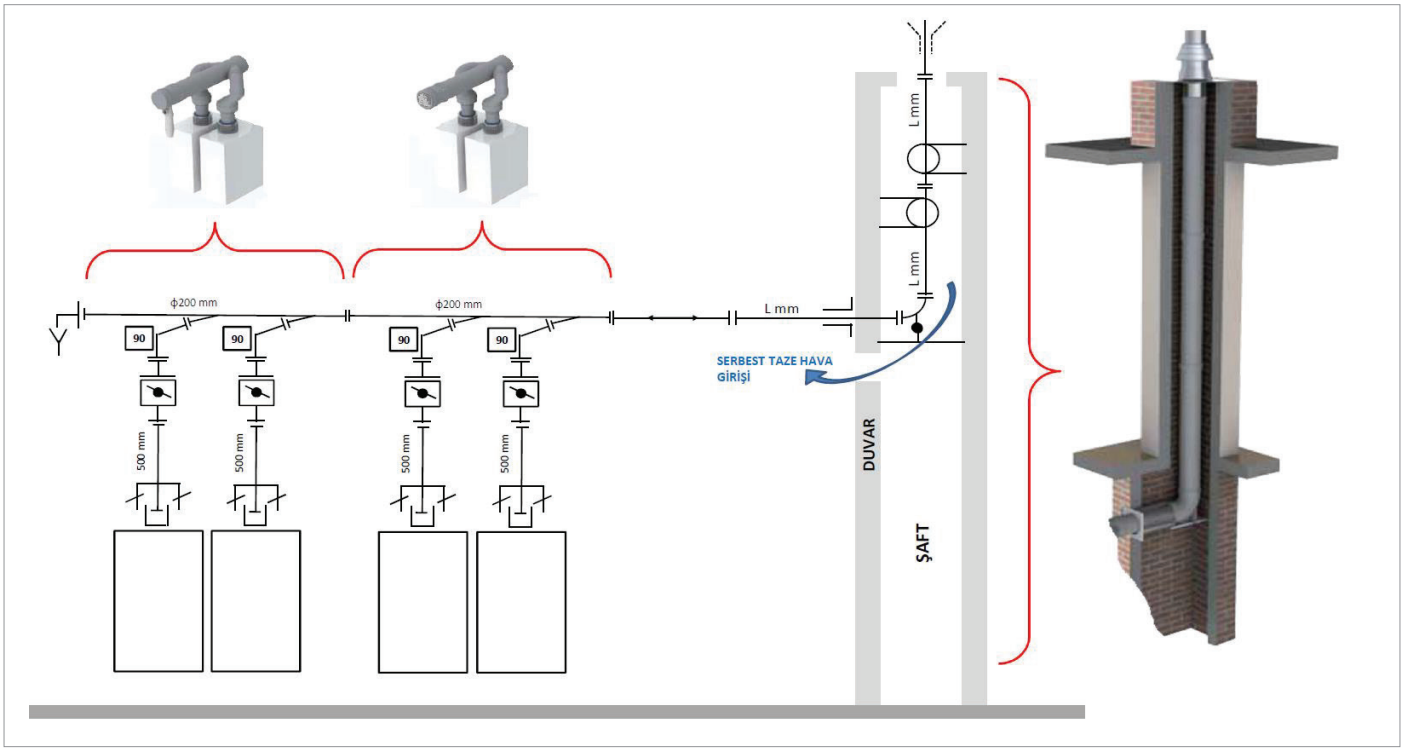

In terms of waste gas installation, structures such as back-to-back connections or concentric flues for single condensing boilers can be used as shown in the examples below. There is a symbolic language to serve as a mutual common language in case of use of the waste gas installation elements that are sampled by the Alarko Carrier and are a reference to the maximum horizontal and vertical lengths allowed due to the loss of pressure in the pipe, thus to facilitate the design of the waste gas installation.

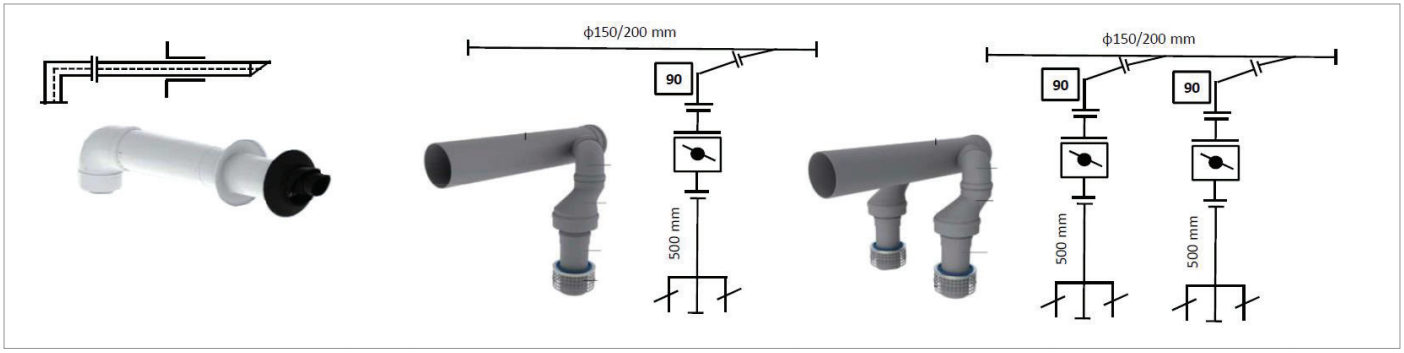

Flue gas measurement adapter must be taken into account in flue planning in order to make flue gas emission measurements. The flue and waste gas installation accessories that can be supplied through Alarko Carrier authorized services and their symbolic descriptions with the mentioned functions are shown in the table below.

The flue and waste gas installation accessories that can be supplied through Alarko Carrier authorized services and their symbolic descriptions with the mentioned functions are shown in the table below.

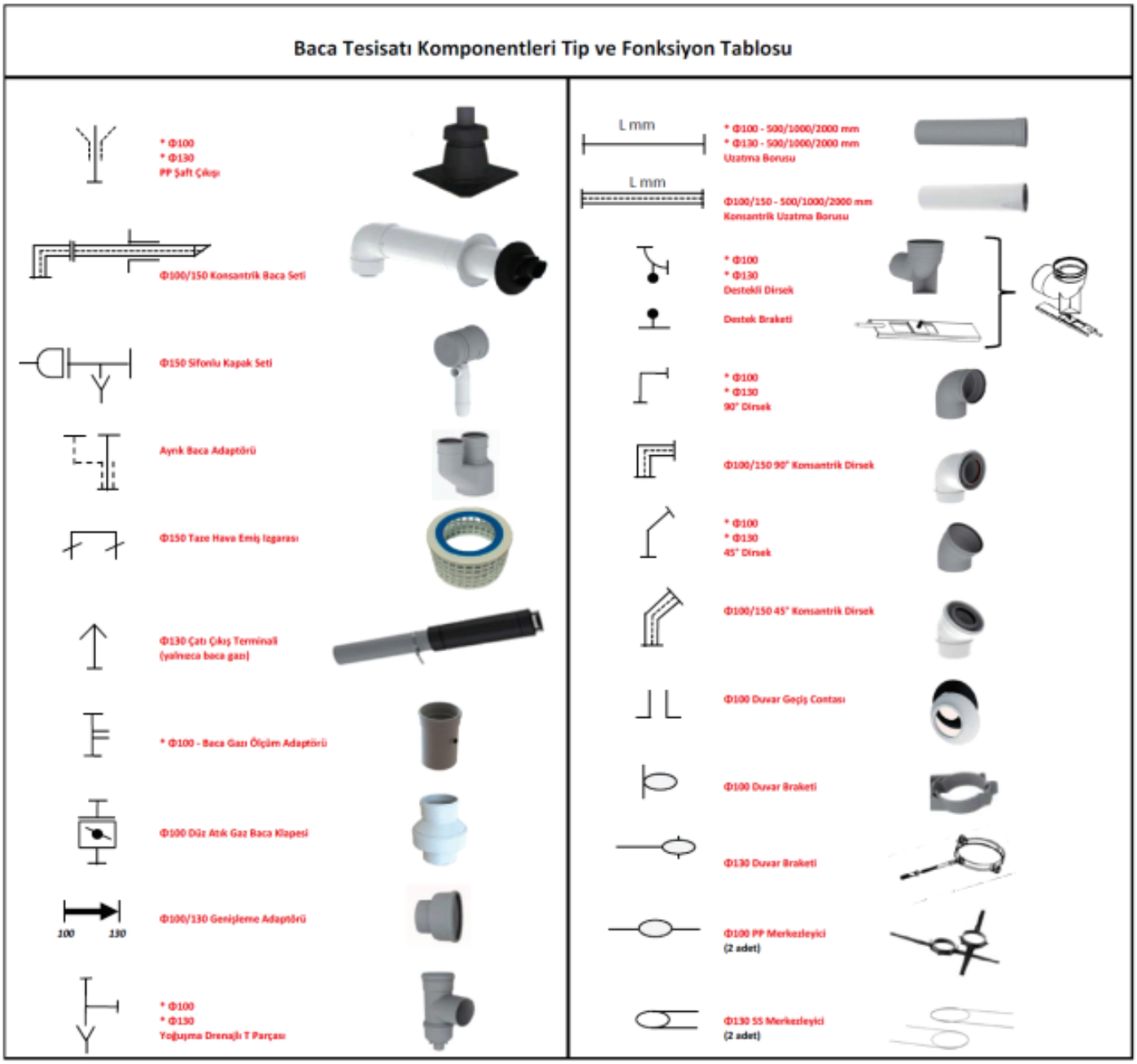

3.6. Boiler, Solar Collector, Direct and Blend Circuits, and Installation System Examples

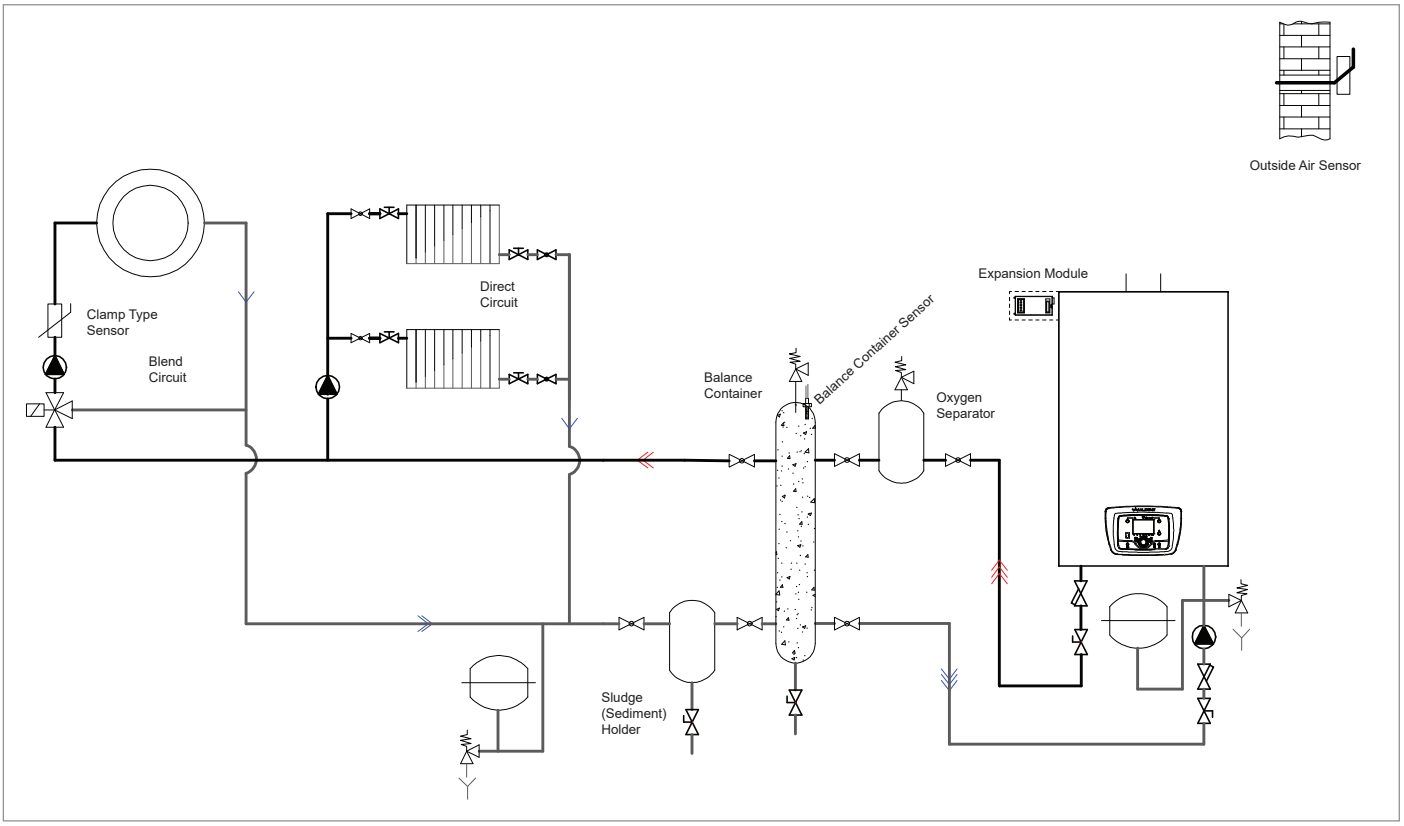

Single boiler, 1 direct circuit, 1 blend circuit connection example (with balance container)

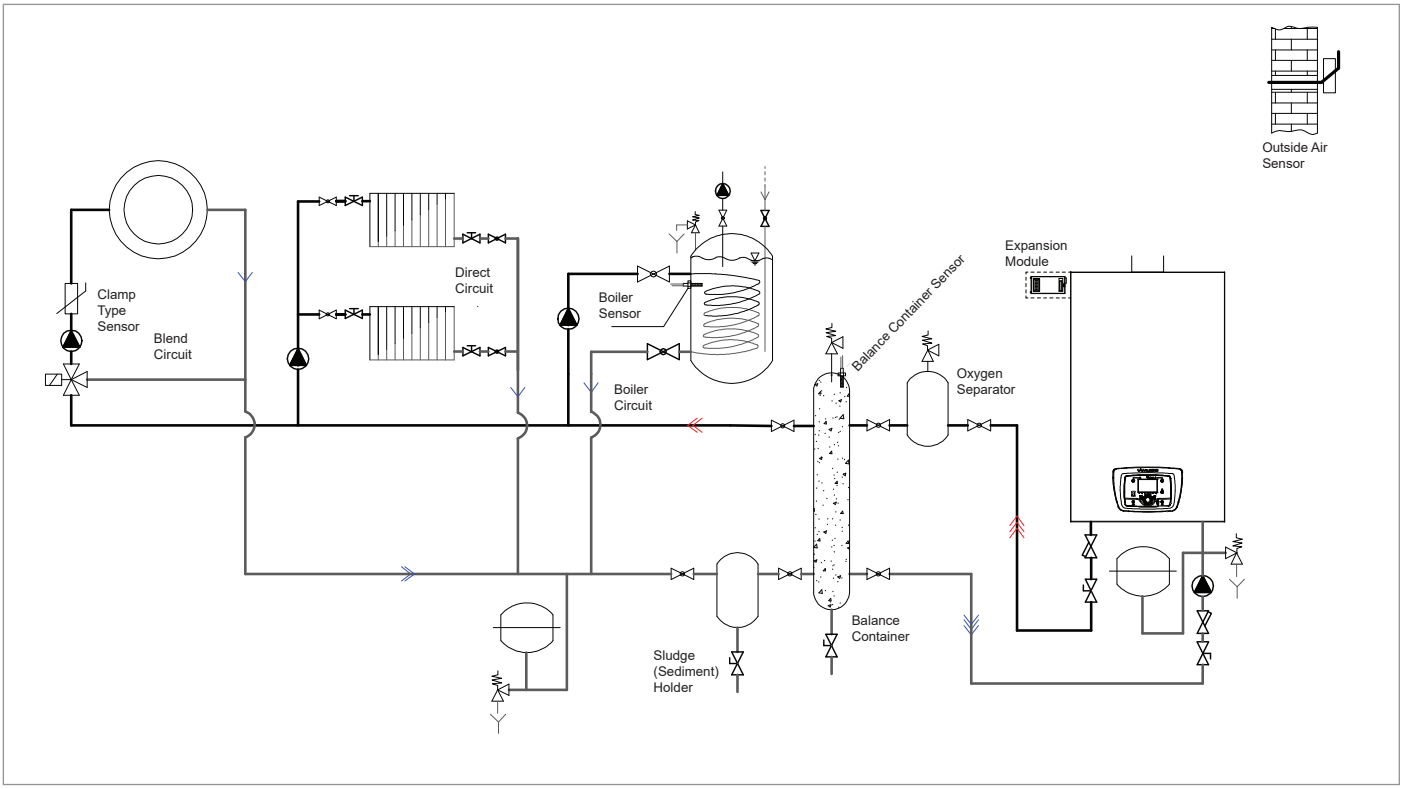

Single boiler, 1 direct circuit, 1 blend circuit, 1 boiler circuit connection example (with balance container)

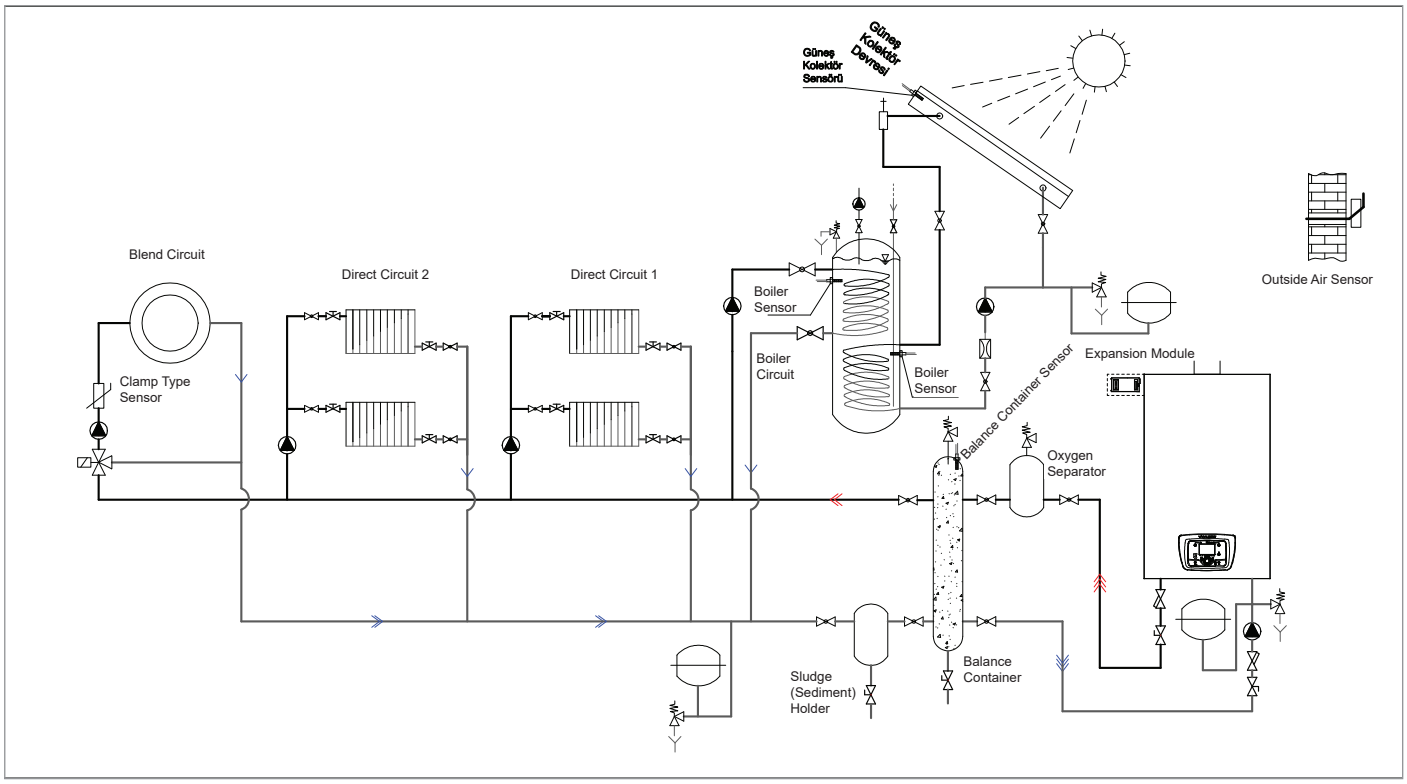

Single boiler, 2 direct circuits, 1 blend circuit, 1 boiler circuit with solar collector connection example (with balance container)

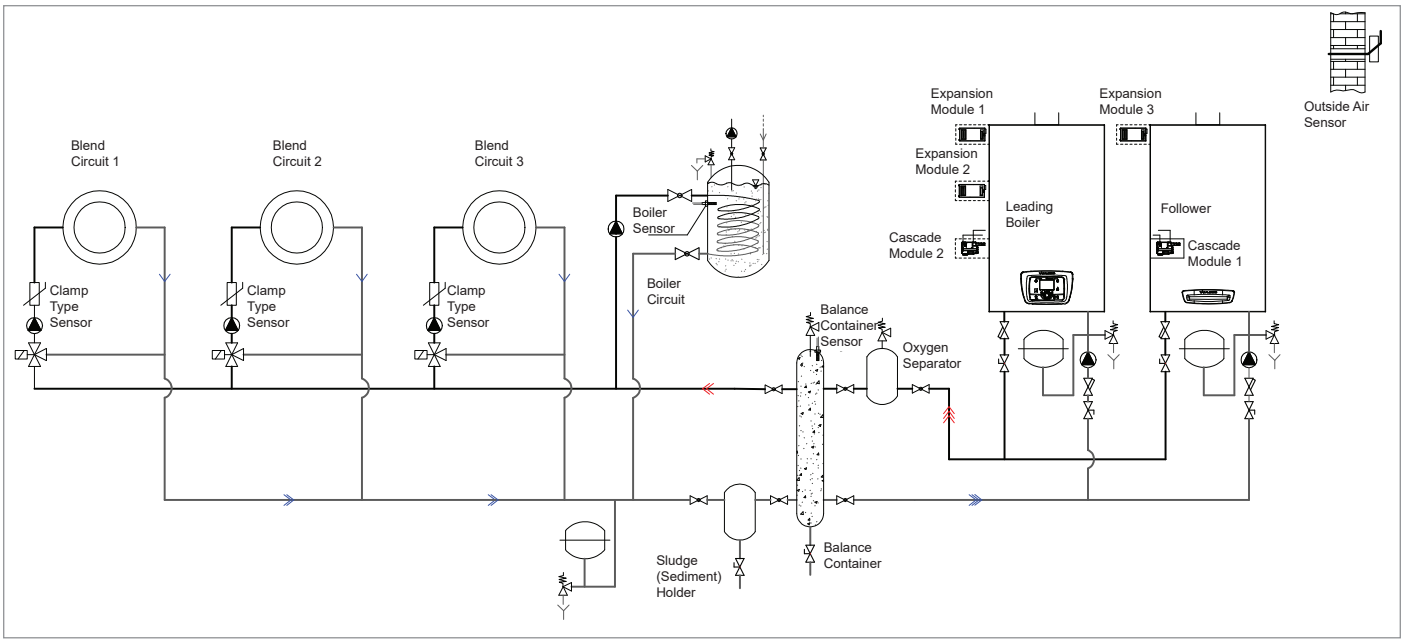

Two (cascade) boilers, 3 blend circuits, 1 boiler circuit connection example (with balance container)

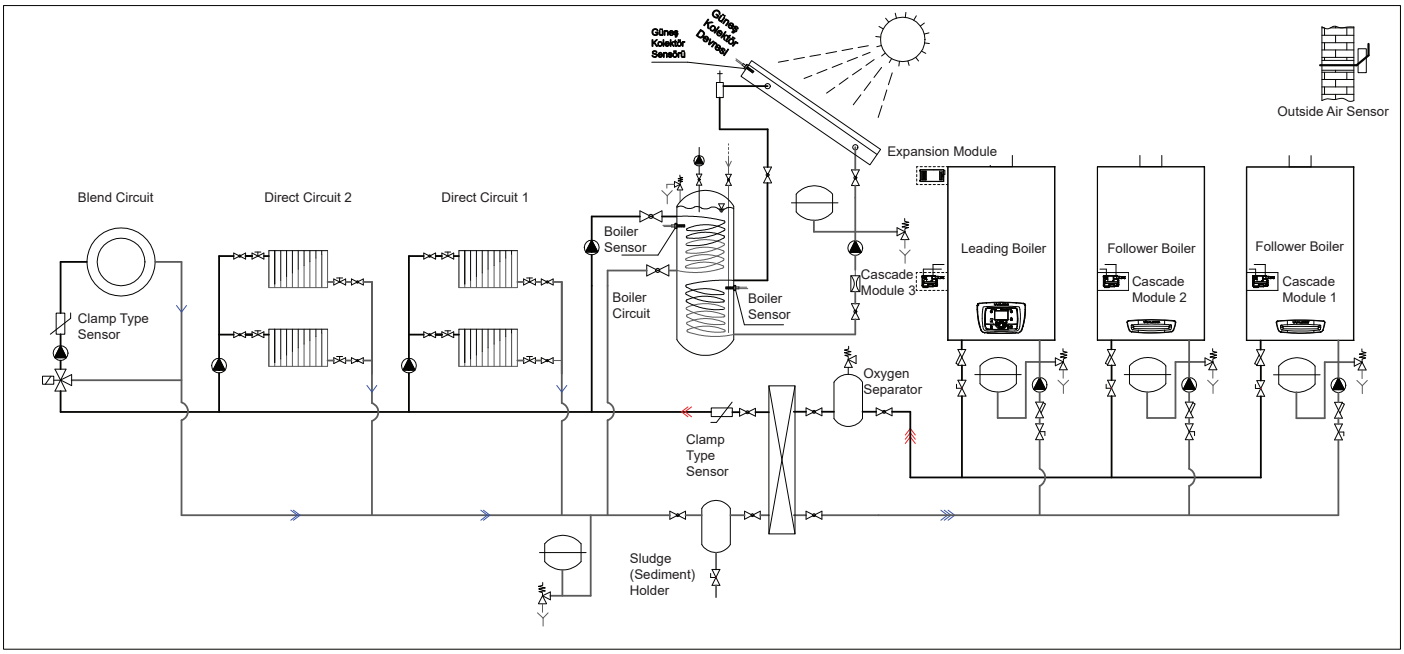

The connection example of three (cascade) boilers, 2 direct circuits, 1 blend circuit, 1 boiler circuit with solar collector with primary and secondary circuit separator plate exchanger

The above installations are examples of the availability of different system variations. Examples such as conventional domestic radiator heating with panel radiators as a direct circuit, as well as underfloor heating or a ventilation system to be used by transferring heat from water to air can also be given. It is possible to derive different variations.

Important reminder:

Your ALDENS condensing boilers are suitable for up to 16 cascade system installations. System management can be performed centrally through the OZW672 web server described in Section 4.2.

3.7. Number of Boilers, Expansion Module, and Sensor Usage Numbers

Aldens WM (pcs)	Aldens WS (pcs)	Boiler Pump	Direct Heating Circuit (Pump)	Blend Heating Circuit (Pump+3YMV+ Sensor)	Solar Collector Circuit (Pump + Sensor)	Single Coil Boiler Circuit (Pump+S ensor)	Dual Coil Boiler Circuit (Pump+2 xSensor)	Balance Container (Sensor)	Plate Exchanger (Sensor)	Cascade Module OCI345.06/101 (Leading	Expansion Module AGU2.550A109	Outside Air Sensor QAC34/101 (Leading	Clamp Type Sensor QAD36/101 (Blend Circuit & Plate Exchanger)	Immersion Type Sensor QAZ36.522/109 (Boiler & Balance	Immersion Type Sensor QAZ36.481/109 (Solar Collector)
1		Stepped/PW	1			1		1				1		2	
1		Stepped/PW	1			1			1			1	1	1	
1		Stepped/PW	2						1			1	1		
1		Stepped/PW	3			1		1			1	1		2	
1		Stepped/PW	3		1		1		1		1	1	1	2	1
1		Stepped	2			1		1			1	1		2	
1		PWM	2			1		1				1		2	
1		Stepped	2	1		1		1			2	1	1	2	
1		PWM	2	1		1		1			1	1	1	2	
1		Stepped/PW	2	1	1		1	1			2	1	1	3	1
1		Stepped/PW	1	1		1		1			1	1	1	2	
1		Stepped/PW	1	2		1		1			2	1	2	2	
1		Stepped/PW	1	2			1		1		2	1	3	2	
1		Stepped/PW		1		1		1			1	1	1	2	
1		Stepped/PW		2	1		1	1			2	1	2	3	1
1		Stepped/PW		3	1		1	1			3	1	3	3	1
1		Stepped		3	2		1		1		4	1	4	2	2
1		PWM		3	2		1		1		3	1	4	2	2
1	1	Stepped/PW	2	1		1			1	1	1	1	2	1	
1	1	Stepped/PW		6	2		2	1		1	6	1	6	5	2
1	1	Stepped	3	3		2			1	1	4	1	4	2	
1	1	PWM	3	3		2			1	1	3	1	4	2	
1	2	Stepped	5			3		1		1	1	1		4	
1	2	PWM	5			3		1		1		1		4	
1	2	Stepped/PW		9		1			1	1	9	1	10	1	
1	15	Stepped/PW	24	24		8			1	1	24	1	25	8	
1	15	Stepped/PW		48		16			1	1	48	1	49	16	

NOTES

1- At least one leading boiler (WM) must be used in a cascade system. Follower boilers (WS) cannot be used on their own without a leading boiler. However, more than one WM series boiler can be used if desired. The cascade system can also consist of completely leading boilers.

2- In a cascade system, two boilers of successive capacity can be used, three different capacities or two large capacities cannot be used.

For example, it can be Aldens 105 WM + 130 WS, 150 WM + 130 WS, 85 WM + 130 WS, 105 WM + 130 WS + 150 WS, 65 WM + 105 WS cascade.

3- Internal waste gas flap is available in 85/105/130/150 types and not available in 65 types. When using 65 types in cascade, an external waste gas flap must be used.

4- In the cascade system, only the leading boiler requires a cascade module. Inside the follower boilers, a cascade module is installed as default.

5- There are 3 pump supply relays on the main board of each boiler. These are assigned as stepped boiler pump, direct circuit pump, and boiler pump. These can be changed.

6- All stepped pumps with or without high energy class must be connected to the QX1 socket of the mains terminal or to one of the pump output relays of the expansion module using a contactor.

7- High energy class pumps with PWM capability are connected to the AUX2 230V AC output socket of the mains terminal with a contactor and to the PWM connection socket of the signal terminal.

8- Only 1 boiler pump can be controlled from each boiler, the boiler pump can be controlled up to the maximum number of boilers in the cascade.

9- Expansion modules should be used at least as many as the number of blend circuits. Because the main board has no blend valve control.

10- An expansion module can control the 3-way blend valve, pump, and sensor of a blend circuit. There is an additional 1 sensor output. If the blend circuit will not be controlled, 3 pumps can be controlled and 2 sensors can be connected.

11- Up to 3 expansion modules can be installed on each boiler main board. Even if additional expansion modules are used in a boiler, maximum of 3 heating circuits (direct and/or blend circuit) can be controlled. 3 heating circuits can be seen from the display.

12- Balance container or plate exchanger should be used as a separator between primary and secondary circuits, even if it is a single boiler or multiple boilers in the system.

13- One outside air sensor is used in each system regardless of the number of boilers.

14- Immersion type sensor is used in boiler and balance container.

15- The clamp type sensor is used at the output of the blend circuit and the primary-secondary circuit separator plate exchanger.

16- The boiler to be used in the solar collector system has dual coil and 2 boiler sensors are used.

4. SETTINGS AND MAINTENANCE

4.1. Temperature Settings and Operation Mode Selection from the Control Panel

4.1.1. Parameter Viewing and Setting

You can easily view and set parameters from the control panel. Some of these parameters are for display only and some can be set. Pressing the “Info” button repeatedly displays any relevant information one after the other.

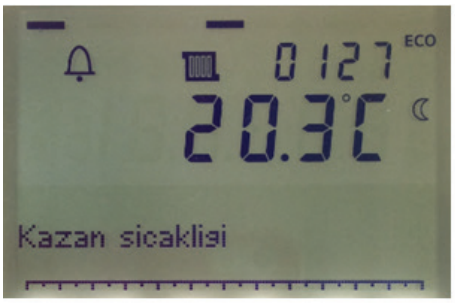

Boiler Temperature

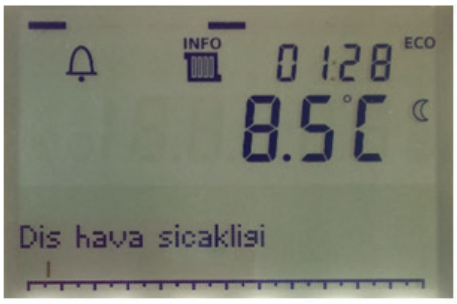

Outside Air Temperature

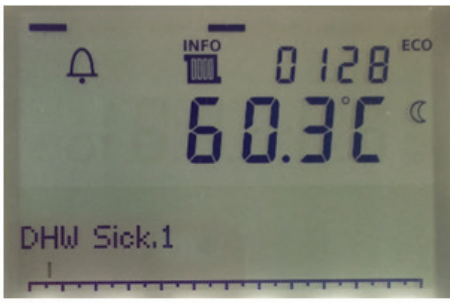

Domestic Water Temperature

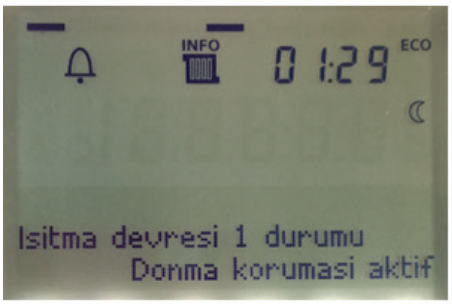

Heating Circuit On/Off

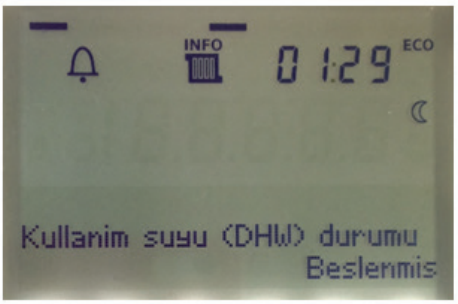

Domestic Water (Boiler) Request

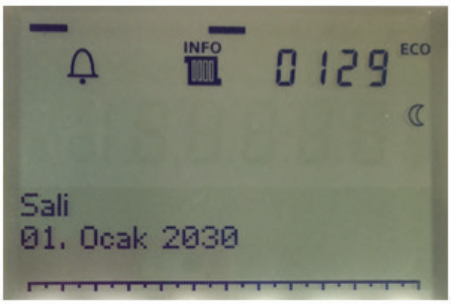

Date

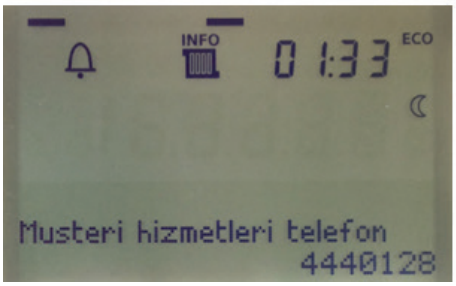

Customer Service Call Central Phone



Static Water Pressure



Selection Button Usage

The “ESC” button is pressed several times to go to the home screen, and if it is a single boiler system, “Boiler Temperature” is displayed on the screen, and if it is a multi boiler (cascade) system, “Cascade Temperature” is displayed. The setting knob is turned and the “OK” button is pressed when the changed value is to be confirmed/saved.

4.1.2. Language Setting

Press the ESC button several times until the Boiler Temperature (or Cascade Temperature) is displayed on the home screen.



Then press the OK button once. Rotate the selection knob to highlight “Operator’s Section”. Press the OK button once. As seen in the picture on the far right, the active language selection will appear on the screen. Press OK once more. The name of the language will start flashing. You can scroll through different languages by rotating the selection knob while the name is flashing. Once you have found your preferred language, press OK to confirm. Your language selection will be saved.

If you do not press OK for 8 seconds from the start of flashing, your active language selection will be preserved and your selection will not be accepted.

Warning! If you do not know the new language you are choosing, it is possible to get lost in the menu because it is not possible to undo your selection without repeating the same steps. For this reason, it is recommended that you act accompanied by a person who has sufficient knowledge of the new language.

4.1.3. Setting Comfort Temperature

What is meant by the temperature setting is to set the “comfort temperature”. The comfort temperature is the room temperature detected by the room unit in installations with a room unit.

In installations where the room unit is not used, it is a (composite) temperature that is detected after the temperature from the boiler outlet water detected by the system temperature sensor and the temperature read from the outside air sensor is processed in an algorithm embedded in the electronic card.



You must make sure you are on the home screen before you start setting up.

For this reason, first press the ESC button several times, you will see the “boiler/cascade flow temperature” on the home screen.

You will find the economy and antifreeze temperature settings on the following pages.



Figure 1. Press the ESC button several times to view the screen in this way.



Figure 2. When you start turning the adjusting knob you will see that the comfort temperature setting value changes.



Figure 3. When you reach the desired temperature, press the OK button.



Figure 4. ALDENS accepts the new comfort setting value and starts operating accordingly.

4.1.4. Selection of Boiler Operation Mode

You need three main buttons. In addition to these three, you can also exit without confirming a value you entered with the ESC (cancel/exit) button. **You can select the mode by pressing the button indicated by 1.**

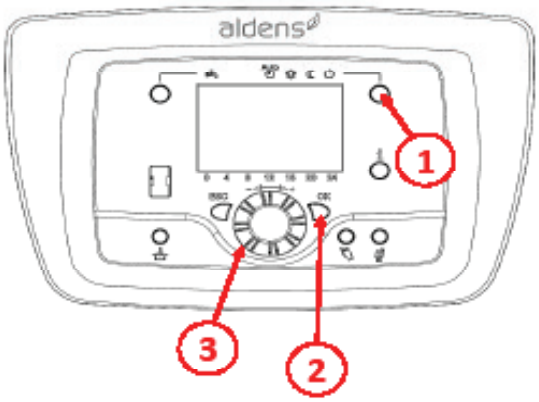



	Symbol appearing on the
Standby mode (only the frost protection is active)	
Economy mode	
Comfort mode	
Operating according to time schedule	The one above that is active according to the time

Standby Mode: It is the mode in which the boiler does not operate, only the frost protection is active. Select this mode when you want to switch off the boiler.

Economy Mode: It is the mode in which the boiler is operated at a lower temperature.

Comfort Mode: It is the mode in which the boiler operates at the comfort temperature you set on the previous page.

Auto: It is the operating mode according to the time schedule. The time schedule is the mode in which the boiler can be on-off 3 times a day. When the boiler is ON, it operates in comfort mode, and when it is OFF, it operates in economy mode.

4.2. Access to Menus and Parameters



- Press the ESC button (several times)
- The home screen will appear



- Select the “End User” line on the screen that appears via the selection button



- Press OK button



- Press OK button



- Press and hold the info button on the screen that appears (approximately 6 seconds)

“You are currently on **End User** level”

IMPORTANT: You do not have access to sections other than the “End User” level. Access to other menus is authorized only by Alarko Carrier authorized services, and if your unauthorized entry is detected, your appliance will be out of warranty.

For correct operation, it is recommended that you first set the time and date of the appliance in the following order. This is necessary for correct automatic operation.

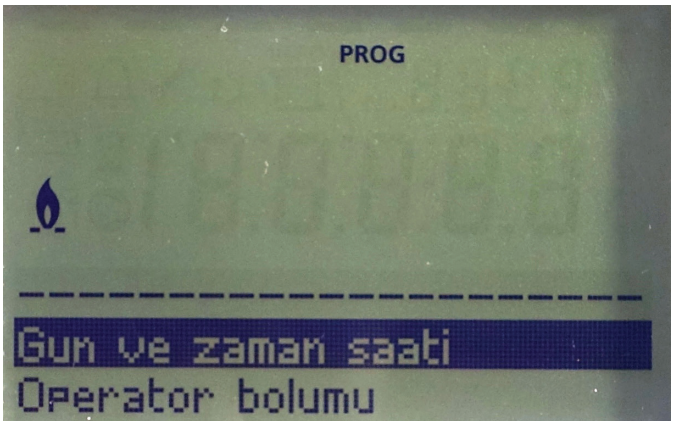



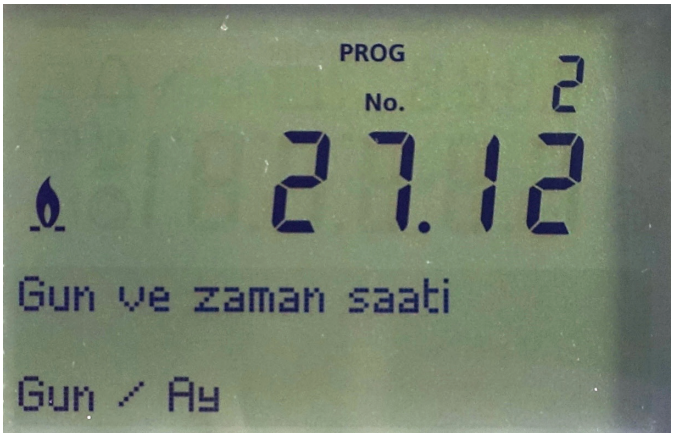



It is mandatory to use an outside air sensor in your system. If not, the boiler main board (LMS 14) detects the outside air temperature at 0°C.

4.3. Running Time Scheduling

On the end user page, select “time schedule heating circuit 1”. Subsequently, it should be determined on which day the work will be performed from parameter 500.

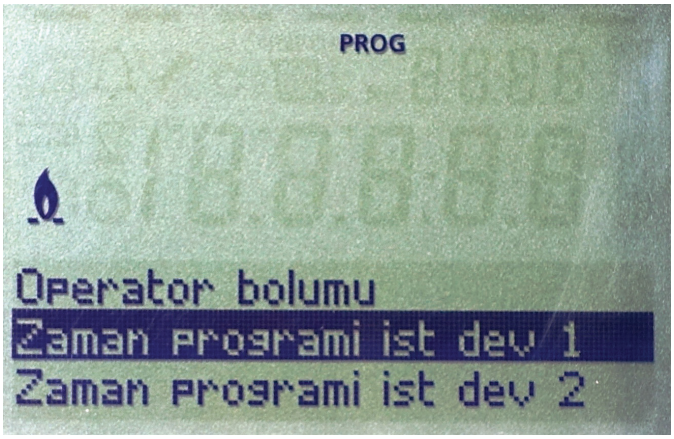



NOTE: The factory setting for working days is set to “On” on Saturdays and Sundays. If you do not want to work these days, first select “Saturday-Sunday” from the parameter 500 as follows. Set all parameters between 501 to 506 to “off” as “-----“



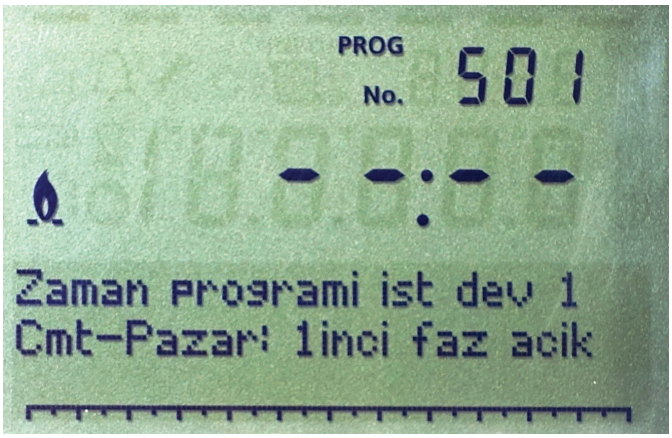

Then select the day of operation from parameter 500 again. There are 4 different options here.

1. Monday-Sunday (All week)
2. Monday-Friday (Weekdays)
3. Saturday-Sunday (Weekend)
4. Monday .....Friday (for each day separately)

In the time schedule, you can set it to “turn on” 3 times a day and “turn off” 3 times a day.

501: First on time 502: First off time
503: Second on time 504: Second off time
505: Third on time 506: Third off time

Below is an example time schedule setting.













NOTE: If, for example, if it is requested to set the time schedule for all days except Sunday where you are located, it is necessary to set it separately for each day because this option is not available in the parameters.

For example, if you want to schedule a time from Monday to Saturday, first select Monday from parameter 500. Set operating hours between parameters 501 and 506.



Then, if the operating hours on all days are the same, you can set the other days in the same way by entering the days you want to copy from parameter 515 using the copy option and pressing the “OK” button.

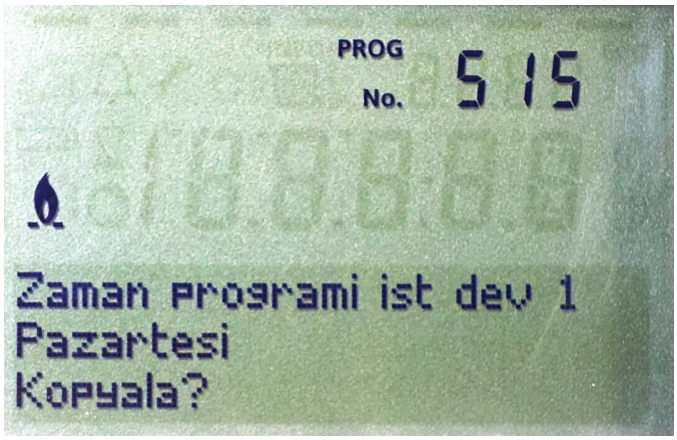

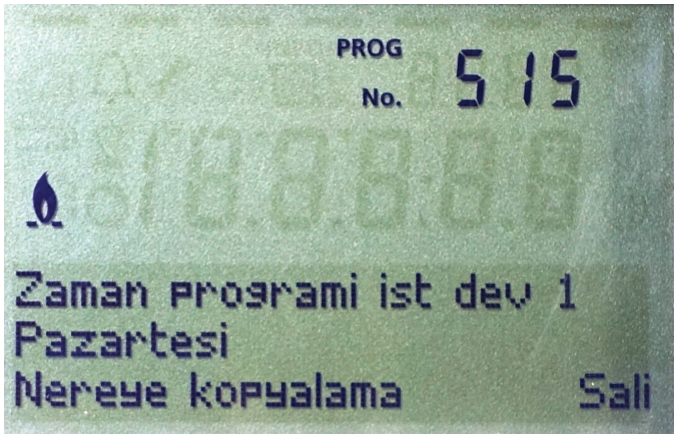

4.4. Frost Prevention Settings

During the period when the appliance is off, the operation is carried out according to parameter 712. This parameter is **“Economy Temperature”.**

In cases where you operate the system according to the time schedule, if the appliance continues to operate even if it switches to the “economy” position and you do not want it to operate at all during this time, you can reduce parameter 712 to the minimum value. The minimum value you can lower parameter 712 is the value of parameter 714 **(Frost prevention temperature).**

If you want to reduce the frost protection to an even lower value, first minimize parameter 714 and then minimize 712.

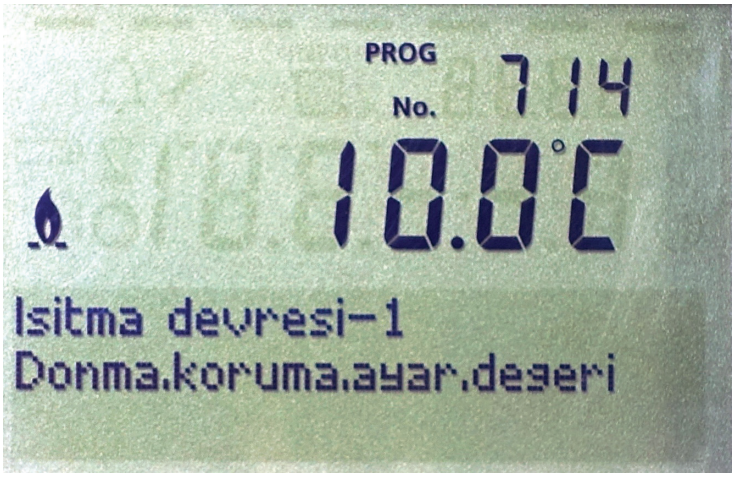

Please review the following example carefully.

As a factory setting, the operating temperatures reach you as follows. Parameter 710 (Comfort temperature) = 20°C

Parameter 712 (Economy temperature) = 16°C

Parameter 714 (Frost protection temperature) = 10°C

In these conditions, the Comfort Temperature cannot be lowered below 16°C. The Economy Temperature cannot be lowered below 10°C. These temperature values are interdependent.

The minimum value from which frost protection can be lowered is 4°C. If you lower the 714 to 4°C, it becomes possible to lower the 712 to 4°C.

Therefore, parameter 712 can be set to 4°C for cases where no operation is desired in economy mode.

4.5. Heating Curve

If heating is difficult despite the comfort temperature being raised, increase the parameter “Heating curve” (curve slope) on the heating circuits page.

Boiler Water Temperature

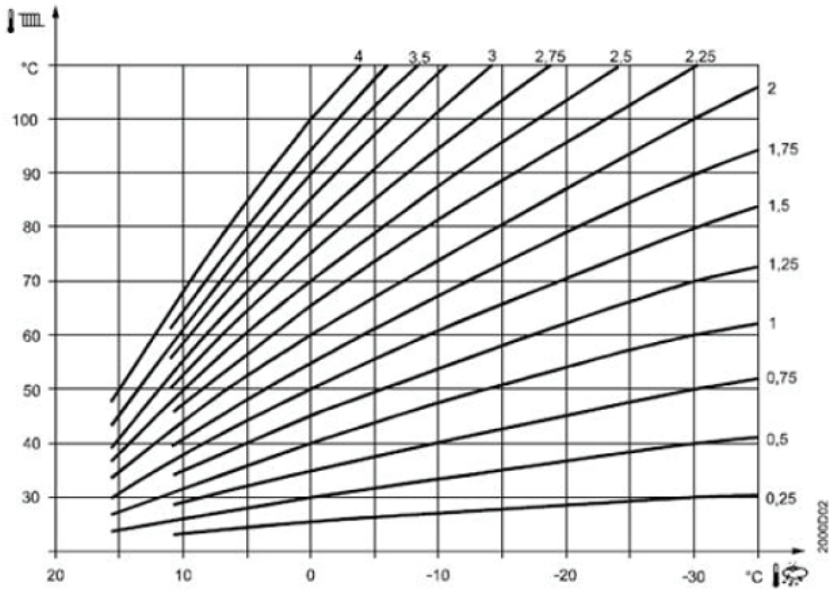

Outdoor air temperature

Thus, boiler water will be prepared at a higher temperature. During this preparation, the outside air and the comfort temperature also have an effect.

For example, in regions with 1.8 or continental climate, value 2 can be entered. The factory setting is 1.5.

E.g. Heating circuit 1 current value

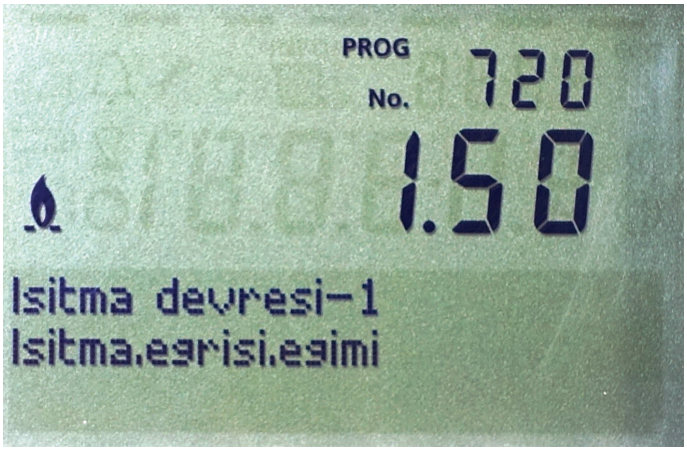

E.g. Heating circuit 1 increased value

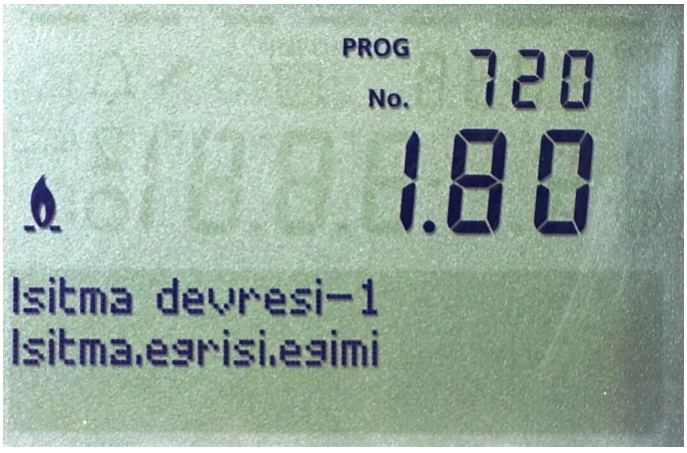

4.6. Main and Important Practical Parameters

Parameter	Intended Use	Unit	Transportation / Information *(E: End user)*
1	Hour/minute setting	hh:mm	E→Hour→1
2	Day/month setting	tt:MM	E→Hour→2
3	Year setting	jjjj	E→Hour→3
501	First on time	hh:mm	E→Time schedule Heating Circuit→501
502	First off time	hh:mm	E→Time schedule Heating Circuit→502
503	Second on time	hh:mm	E→Time schedule Heating Circuit→503
504	Second off time	hh:mm	E→Time schedule Heating Circuit→504
505	Third on time	hh:mm	E→Time schedule Heating Circuit→505
506	Third off time	hh:mm	E→Time schedule Heating Circuit→506
515	Copying operating time interval information to other active days	-	
710	Comfort temperature	(°C)	E→ Heating circuit 1→710 ***or from Home Screen***
712	Economy temperature	(°C)	It can be reduced down to the value of 714. E→Heating circuit 1→712
714	Frost prevention temperature	(°C)	E→ Heating circuit 1→714
720	Heating curve 1 slope	-	E→ Heating circuit 1→720
7170	Customer service / authorized service telephone number	-	XXXXXXXXX (9 digits) **Reading: From the home screen**

4.7. Boiler Maintenance Content

The items that should be checked without skipping in the maintenance of your ALDENS condensing boiler are listed below. Delaying or neglecting one or more of these items will have a life-limiting effect on your appliance and installation

- Cleaning the exchanger
- Checking the burners and electrodes
- Checking the fan motor balance
- Cleaning the fan blades
- Checking the thermostat and sensors
- Cleaning the siphon
- Checking the condensate drain
- Checking the pressure of the boiler expansion tanks, filling the gas if the pressure is low
- Checking the flue sealing
- Flue gas analysis and combustion control
- Gas leakage check of gas leak detector or detergent foam and pipe and gas valve-venturi connection after the gas valve
- Cleaning the strainer
- Cleaning the sludge/sediment holder
- Checking the level of the neutralizer container and granules, adding granules up to the level above the neutralizer container
- Checking that the system works properly with all sensors, modules, pumps, and 3YMVs
- Filling in the authorized service certificate

It is recommended that you ensure that the authorized service personnel who carry out the annual maintenance of your boiler on the issues mentioned here carry out the necessary examination in these matters and that they take the precautions.

4.8. System Monitoring and Control via Web Server and Local Network / Internet (Ozw672)

In single, cascade, or combined systems (if there are other heating system elements such as solar collector, boiler, etc.), it is possible to control and monitor the system through the web server. With the use of OZW672 web server, it is possible to access your entire installed system via a local network or internet connection and to control it through the web browser. The elements of your heating system installed with this Siemens appliance are transformed into appliances that communicate within the local network and are connected to each other through OZW672 and to you through the web browser. It is possible to operate up to 256 boilers in a cascade.

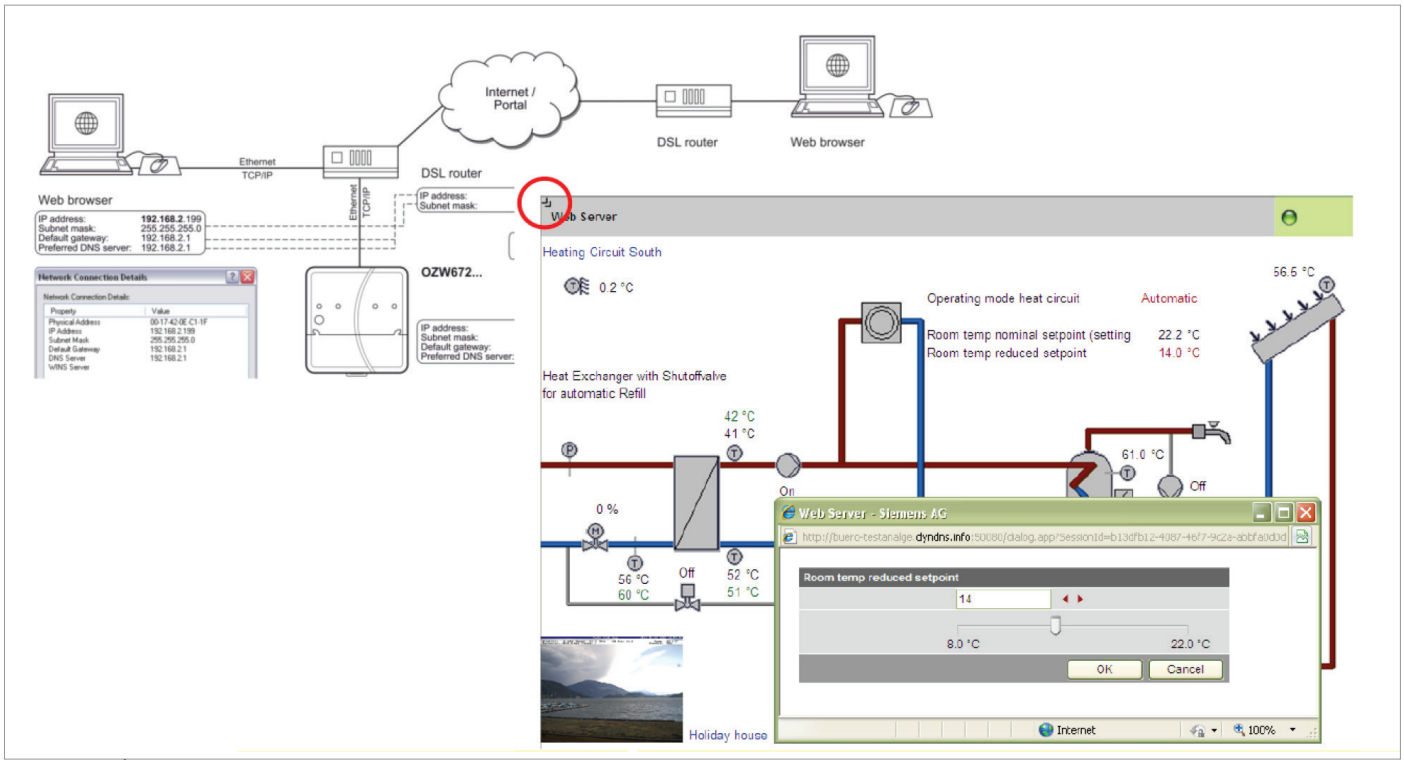

5. ERROR CODES

You can view the last 20 errors encountered by the LMS14 control panel on the “Error” page at the engineer level. As each new error occurs, the oldest errors in the memory are erased. The 20 most recent errors remain in memory.

The error codes you may encounter in the system are as follows. When the errors in this list are encountered, you should contact the nearest authorized service. You can find the list of authorized services of your province and district on the last page of this manual.

You can also visit http://www.alarko-carrier.com.tr/tr/alarko-carrier-yetkili-servis page for the updated authorized services list.

BSB: Boiler System Bus
LPB: Local Process Bus

BSB* Error Code	LPB* Code	Error Definition
10		Outdoor temperature, sensor error
20		Boiler temperature 1, sensor error
25		Solid fuel boiler temperature, sensor error
26		General flow water temperature, sensor error
28		Flue gas temperature, sensor error
30		Flow water temperature 1, sensor error
31		Flow water temperature 1, cooling, sensor error
32		Flow water temperature 2, sensor error
38		Flow water temperature, Main controller, sensor error
40		Return water temperature 1, sensor error
46		Cascade return water temperature, sensor error
47		General return water temperature, sensor error
50		Domestic water temperature 1 sensor error
52		Domestic water temperature 2 sensor error
54		Flow water temperature, sensor error
57		Domestic water, recirculation sensor error
60		Room temperature 1, sensor error
65		Room temperature 2, sensor error
68		Room temperature 3, sensor error
70		Storage tank temperature 1 (upper), sensor error
71		Storage tank temperature 2 (lower), sensor error
72		Storage tank temperature 3 (medium), sensor error
73		Collector temperature 1, sensor error
78		Water pressure, sensor error
82		LPB address conflict
83		BSB cable cross-sectional/no communication
84		BSB cable addresses conflict
85		BSB RF communication error

91		Overtime of data in EEPROM
98		Additional module 1, error
99		Additional module 2, error
100		2 time clocks leading
102		Leading time clock without backup
103		Communication error
105		Maintenance message
109		Boiler temperature inspection
110		STB (SLT) lockout
111		Temperature limit safety shutdown
117		Water pressure too high
118		Water pressure too low
119		Water pressure switch deactivation
121		Heating circuit 1 flow water temperature not reached
122		Heating circuit 2 flow water temperature not reached
125		Maximum boiler temperature exceeded
126		Domestic water supply temperature not reached
127		Domestic water legionella temperature not reached
128		Flame loss while running
129		Wrong air supply
130		Flue gas temperature limit exceeded
132		Gas pressure switch safety shutdown
133		Safety time for flame formation exceeded
146		Sensor/controller element configuration error
151		LMS14... internal error
152		Parameter error
153		The appliance is manually locked
160		Fan speed threshold not reached
162		Air pressure switch not closing
164		Flow/pressure switch, heating circuit error
166		Air pressure switch error, not opening
169		Sitherm Pro system error
170		Water pressure sensor error, primary side
171		Alarm contact 1 active
172		Alarm contact 2 active
173		Alarm contact 3 active
174		Alarm contact 4 active
176		Water pressure 2 too high
177		Water pressure 2 too low
178		Heating circuit 1 temperature limiter
179		Heating circuit 2 temperature limiter
183		The appliance is in parameter mode
195		Maximum time per charge exceeded

196		Maximum charging time per week exceeded
209		Heating circuit error
214		Monitoring the engine
215		Separator valve fan air error
216		Boiler error
217		Sensor error
218		Pressure inspection
241		Flow sensor error for efficiency measurement
242		Return sensor error for efficiency measurement
243		Swimming pool sensor error
260	217	Flow water temperature 3, sensor error
270	215	Exchanger temperature difference too high
317	214	Mains frequency out of allowed range
320	217	Domestic water supply temperature, sensor error
321	217	Domestic water outlet temperature, sensor error
322	218	Water pressure 3 too high
323	218	Water pressure 3 too low
324	146	BX input, same sensor
325	146	BX input/additional module, same sensor
326	146	BX input/blend group , same sensor
327	146	Additional module, same function
328	146	Blend group, same function
329	146	Additional module/blend group, same function
330	146	Sensor input BX1 no function
331	146	Sensor input BX2 no function
332	146	Sensor input BX3 no function
333	146	Sensor input BX4 no function
335	146	Sensor input BX21 no function
336	146	Sensor input BX22 no function
339	146	Collector pump Q5 missing
340	146	Collector pump Q16 missing
341	146	B6 sensor missing
342	146	Solar power supply B31 sensor missing
343	146	Solar energy integration lost
344	146	Solar energy control element spare tank K8 missing
345	146	Solar injector control element swimming pool K18 missing
346	146	Solid fuel boiler pump Q10 missing
347	146	Solid fuel boiler comparison sensor missing
348	146	Solid fuel boiler address error
349	146	Accumulation tank return valve Y15 missing
350	146	Accumulation tank address error
351	146	Main controller/system pump, address error
352	146	Header without pressure, address error

353	146	B10 sensor missing
371	209	Heating circuit 3 flow water temperature
372	209	Heating circuit 3 temperature limiter
373	103	Additional module 3
374	169	Sitherm Pro calculation
375	169	BV step motor
376	169	Drift test limit value
377	169	Drift test prevented
378	151	Internal repetition
382	129	Repetition speed
384	151	Follower light
385	151	Mains low voltage
386	129	Fan speed tolerance
387	129	Air pressure tolerance
388	146	Domestic water sensor no function
426	151	Flue gas damper feedback
427	152	Flue gas damper configuration
429	218	Dynamic water pressure too high
430	218	Dynamic water pressure too low
431	217	Primary exchanger sensor
432	151	Ground function not connected
433	216	Primary exchanger temperature too high

6. ENERGY-SAVING RECOMMENDATIONS

- In order to obtain high efficiency from your condensing boiler, adjust the heating water temperature to 50°C and below.
- If the boiler is used in your heating installation, do not adjust the domestic water temperature value to 40°C and above. This will also prevent the risk of scalding.
- If your boiler is used in central heating, the heat cost allocator or the heat meters to be placed at the entrance of the apartment will facilitate individual economy and will help to reduce the total heating cost.
- Close the heating radiator valves of the ventilated environment during ventilation.
- The use of a thermostatic valve and a room thermostat is very important for comfortable heating. If not, provide a thermostatic valve for the room thermostat and/or heating radiators that are compatible with your heating boiler. (Programmed room thermostats provide higher energy savings and comfort.)
- Be careful not to cover the top, bottom, and front of the heating radiators with objects such as curtains, furniture, etc.
- A room temperature of 20°C is sufficient for the winter months. Further heating will increase energy consumption.
- In order for your appliance to work efficiently and to solve possible problems in advance, do not forget to have it serviced at least once a year by the authorized service.

Note: Manufacturer reserves the right to change any product specifications without notice.

ALARKO

Carrier

ALARKO CARRIER SANAYİ VE TİCARET A.Ş.

GOSB - Gebze Organize Sanayi Bölgesi, Şahabettin Bilgisu Cad.

No:1604 Gebze 41480 KOCAELİ - TÜRKİYE

Phone: +90 262 648 60 00

Fax: +90262 648 60 08

www.alarko-carrier.com.tr

info@alarko-carrier.com.tr